KN 19, 1NO + 1NC, $9^{\pm 3}$ N



fields of application

- Measurement-control-regulation
- Mechanical and system engineering
- Electro-medical
- Home technology

special features

- Silver contacts for reliable switching (250 V / 6 A)
- For use beneath closed overlays / keycaps
- Optional: spot illumination with 1 LED
- Overall height: 9.7 mm
- Terminal technology: THT

description

KN 19 offers the possibility of integrating the mains switch (250 V / 6A) directly into the low-profile data entry system. This means there is no need for extra switches on the device and therefore no additional openings in the overlay. This enables optimal device safety and uniform design. The contact opening widths comply with the VDE guidelines. The KN 19 can also be used under RK 90 keycaps.

technical data

general

Operating temperature, min.	-25 °C
Operating temperature, max.	70 °C
Storage temperature, min.	-40 °C
Storage temperature, max.	70 °C
illuminated	Yes
Luminous elements	LED
Soldering time for manual soldering, max.	3 sec
Soldering temperature for manual soldering	350 °C
Soldering	wave soldering according to DIN EN 61760-1
Packaging	Tube
Packaging unit	12 pcs.
net weight	9.0 g
Operating life electrical	100,000 (6A / 250V AC) cycles 50,000 (10A / 50V DC) cycles
B10 electrical	130.000 (6A / 250V AC) cycles 65.000 (10A / 50V DC) cycles
Degree of protection, front side, according to DIN EN 60529	IP40
MOQ order	12 pcs.
RoHS compliant	Yes
REACH compliant	Yes

mounting diameters

direct links

- RAFI eCatalog

The information in this data sheet only contains general descriptions and / or performance features, which may not apply precisely as described to the respective application, and which my change due to further product enhancements. The technical data, illustrations and other information about our products are the mere results of individual technical testing. These descriptions and other product features are only binding if they expressly agreed upon at the time of the conclusion of a binding contract. In all other cases, we reserve the right to make technical changes as well as changes of availability. Pictures and other graphic illustrations are approximations only. All product names may be trademarks or brand names of the RAFI Group or any other sub-supplier of RAFI. The use of such by any third parties for their own purposes may infringe the rights of the respective entity holding those rights.

RAFI GmbH & Co. KG

Ravensburger Str. 128-134
88276 Berg / Ravensburg
Germany
www.rafi-group.com,
info.headquarters@rafi-group.com

Outside dimension, length	37.8 mm
Outside dimension, width	18.8 mm
Outside dimension, height	9.7 mm
Installation height	9.7 mm
Grid, min.	19.05 x 38.1 mm

mechanical data

Actuation function	latching
Operating force, max.	100 N
Operating force, min.	9 ± 3.0 N
Switching travel	$0{,}55^{\pm 0{,}15}$ mm
Bounce time at 10 mm/s	<10 ms
Contact function	1 NC + 1 NO
Contact system	Bridge-snap-action contact
Contact material	Silver
Fixing	Soldering
Solderability	Yes
Terminal on the rear	THT

electrical data

Rated voltage, min.	12 V
Rated voltage, max.	250 V
Rated current, min.	0.1 A
Rated current, max.	6 A
Rated power, max. DC	250 W

The information in this data sheet only contains general descriptions and / or performance features, which may not apply precisely as described to the respective application, and which my change due to further product enhancements. The technical data, illustrations and other information about our products are the mere results of individual technical testing. These descriptions and other product features are only binding if they expressly agreed upon at the time of the conclusion of a binding contract. In all other cases, we reserve the right to make technical changes as well as changes of availability. Pictures and other graphic illustrations are approximations only. All product names may be trademarks or brand names of the RAFI Group or any other sub-supplier of RAFI. The use of such by any third parties for their own purposes may infringe the rights of the respective entity holding those rights.

RAFI GmbH & Co. KG

Ravensburger Str. 128-134
88276 Berg / Ravensburg
Germany
www.rafi-group.com,
info.headquarters@rafi-group.com

drawings

Dimensioned drawing

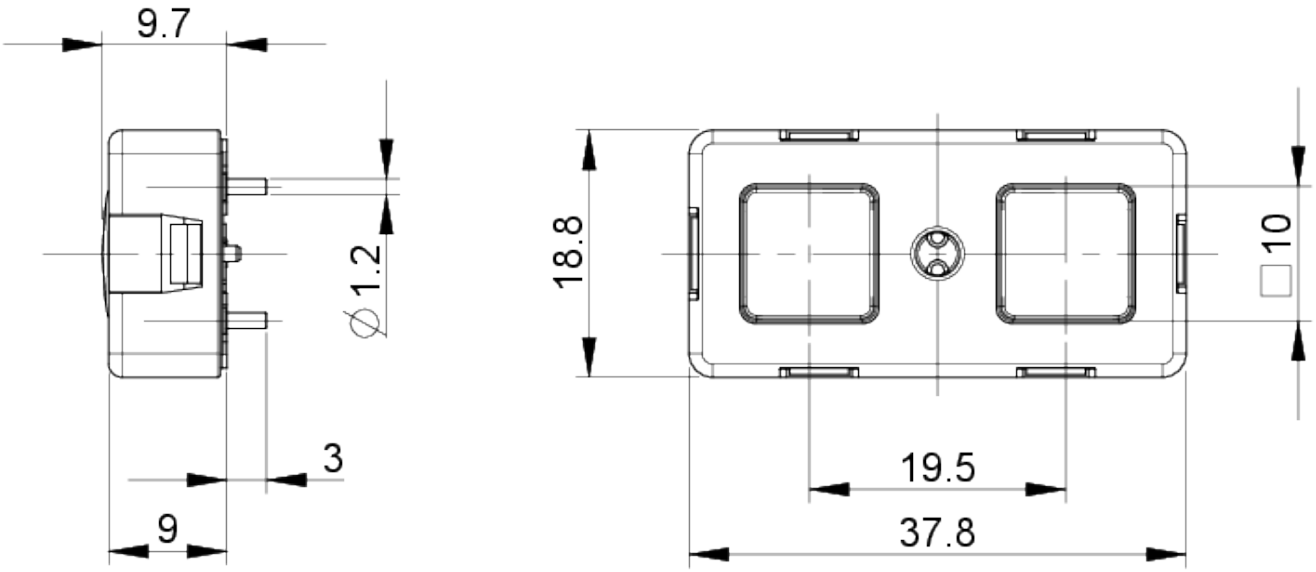

PCB drawing

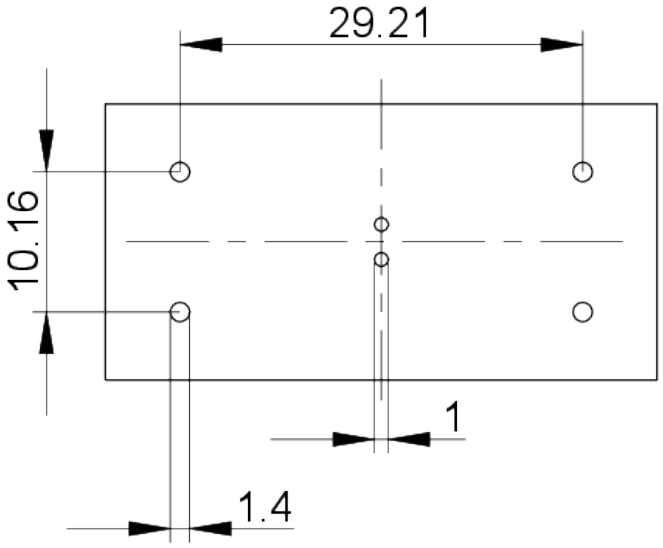

The information in this data sheet only contains general descriptions and / or performance features, which may not apply precisely as described to the respective application, and which my change due to further product enhancements. The technical data, illustrations and other information about our products are the mere results of individual technical testing. These descriptions and other product features are only binding if they expressly agreed upon at the time of the conclusion of a binding contract. In all other cases, we reserve the right to make technical changes as well as changes of availability. Pictures and other graphic illustrations are approximations only. All product names may be trademarks or brand names of the RAFI Group or any other sub-supplier of RAFI. The use of such by any third parties for their own purposes may infringe the rights of the respective entity holding those rights.

RAFI GmbH & Co. KG

Ravensburger Str. 128-134
88276 Berg / Ravensburg
Germany
www.rafi-group.com,
info.headquarters@rafi-group.com

Schematic diagram

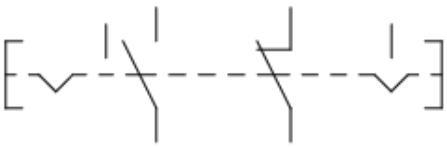

1 NC + 1 NO

The information in this data sheet only contains general descriptions and / or performance features, which may not apply precisely as described to the respective application, and which my change due to further product enhancements. The technical data, illustrations and other information about our products are the mere results of individual technical testing. These descriptions and other product features are only binding if they expressly agreed upon at the time of the conclusion of a binding contract. In all other cases, we reserve the right to make technical changes as well as changes of availability. Pictures and other graphic illustrations are approximations only. All product names may be trademarks or brand names of the RAFI Group or any other sub-supplier of RAFI. The use of such by any third parties for their own purposes may infringe the rights of the respective entity holding those rights.

RAFI GmbH & Co. KG

Ravensburger Str. 128-134
88276 Berg / Ravensburg
Germany
www.rafi-group.com,
info.headquarters@rafi-group.com