TW7011

Infrared temperature sensor

TW-008CODM30-QFPKG/US

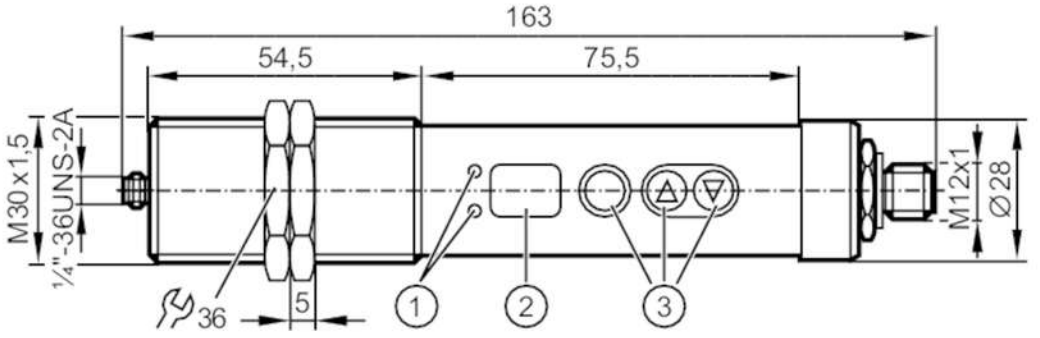

1 LEDs switching status
2 7-segment LED display 2-digit
3 programming buttons

Product characteristics			
Number of inputs and outputs		Number of digital outputs: 2	
Measuring range		350...1350 °C	662...2462 °F
Application			
Application		tempering temperatures; graphite; ceramics; metals; forging; sintering; heat treatment; rolling	
Electrical data			
Operating voltage	[V]	10...34 DC	
Current consumption	[mA]	30; (24 V)	
Protection class		III	
Inputs / outputs			
Number of inputs and outputs		Number of digital outputs: 2	
Inputs			
Test input		test function active at U(test) > 9 V	
Outputs			
Total number of outputs		2	
Output signal		switching signal	
Electrical design		PNP	
Number of digital outputs		2	
Output function		normally open / normally closed; (parameterisable)	
Max. voltage drop switching output DC	[V]	2.5	
Permanent current rating of switching output DC	[mA]	150	
Short-circuit protection		yes	
Type of short-circuit protection		pulsed	
Overload protection		yes	
Detection zone			
Wave length range	[µm]	1...1.7	

TW7011

Infrared temperature sensor

TW-008CODM30-QFPKG/US

Measuring/setting range			
Measuring range		350...1350 °C	662...2462 °F
Factory setting		SP1 = 25 %; rP1 = 23 %; SP2 = 75 %; rP2 = 73 %	
Set point SP		350...1340 °C	662...2444 °F
Reset point rP		350...1340 °C	662...2444 °F
In steps of		10 °C	18 °F
Resolution			
Resolution of switching output	[K]	10	
Resolution of display	[K]	10	
Accuracy / deviations			
Accuracy	[K]	< ± 1 %; (of VMR (degree of emission = 1 and T = 23 °C))	
Response times			
Response time	[ms]	2	
Software / programming			
Adjustment of the switch point		programming buttons	
Parameter setting options		Hysteresis; normally open / normally closed; switch-on/switch-off delay	
Operating conditions			
Ambient temperature	[°C]	0...65	
Storage temperature	[°C]	-20...80	
Max. relative air humidity	[%]	95; (non condensing)	
Protection		IP 65	
Tests / approvals			
EMC		DIN EN 61000-4-2 ESD	4 kV CD / 8 kV AD
		DIN EN 61000-4-3 HF radiated	10 V/m
		DIN EN 61000-4-4 Burst	2 kV coupling clamp
		DIN EN 61000-4-5 Surge	0,5 / 1 kV
		DIN EN 61000-4-6 HF conducted	10 V
		EN 55011 emission	class B
Shock resistance		DIN EN 60068-2-27	30 g (11 ms)
Vibration resistance		DIN EN 60068-2-6	5 g (10...2000 Hz)
MTTF	[years]	117	
Mechanical data			
Weight	[g]	374	
Housing		threaded type	
Dimensions	[mm]	M30 x 1.5 / L = 163	
Thread designation		M30 x 1.5	
Fibre optic connection		¼"-36UNS-2A	
Materials		threaded sleeve: stainless steel (1.4305 / 303); polyester	
Lens material		tempered optical glass	

TW7011

Infrared temperature sensor

TW-008CODM30-QFPKG/US

Displays / operating elements		
Display	switching status	2 x LED, yellow
	function display	7-segment LED display, 2-digit
	measured values	7-segment LED display, 2-digit
Operating elements	3	pushbuttons

Accessories	
Accessories (supplied)	lock nuts: 2
Accessories (optional)	fibre optics:, E35061 / E35062
	Measuring head:, E35060

Remarks	
Remarks	MW = measured value
	MEW = Final value of the measuring range
Pack quantity	1 pcs.

Electrical connection

Connection

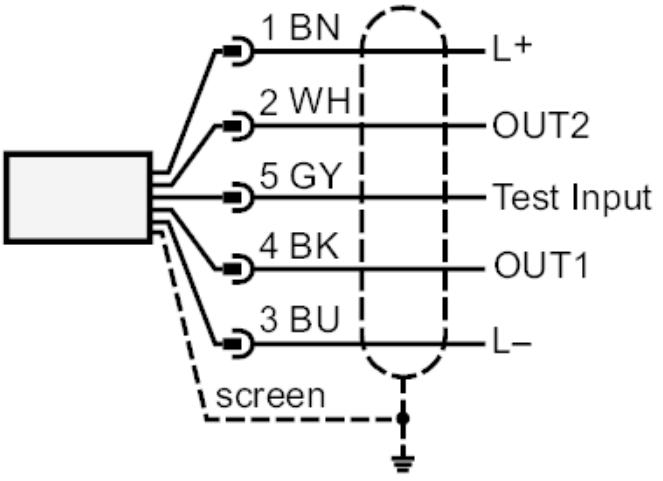

	Core colours :
BK =	black
BN =	brown
BU =	blue
GY =	grey
WH =	white

Connector: 1 x M12