

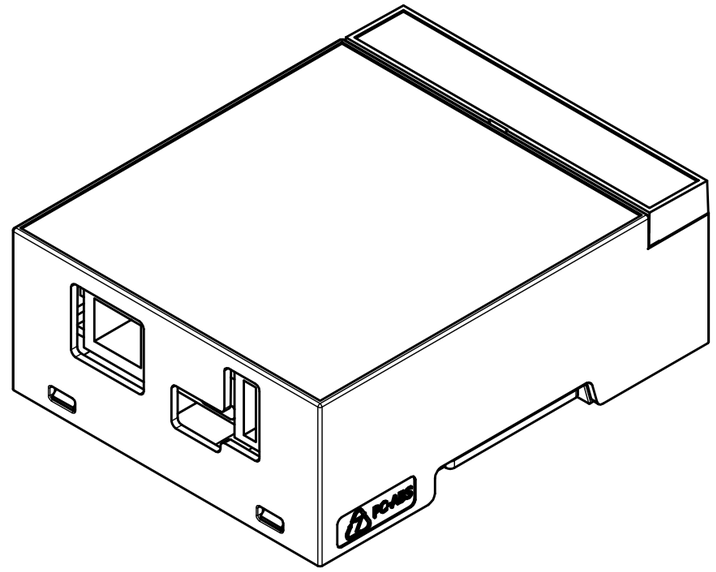

A-A (1 : 1)

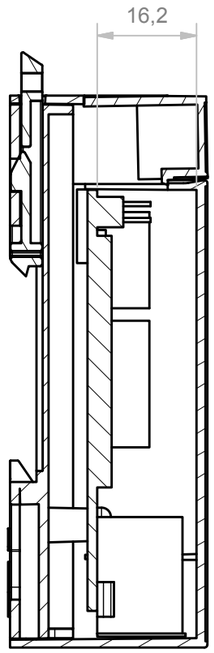

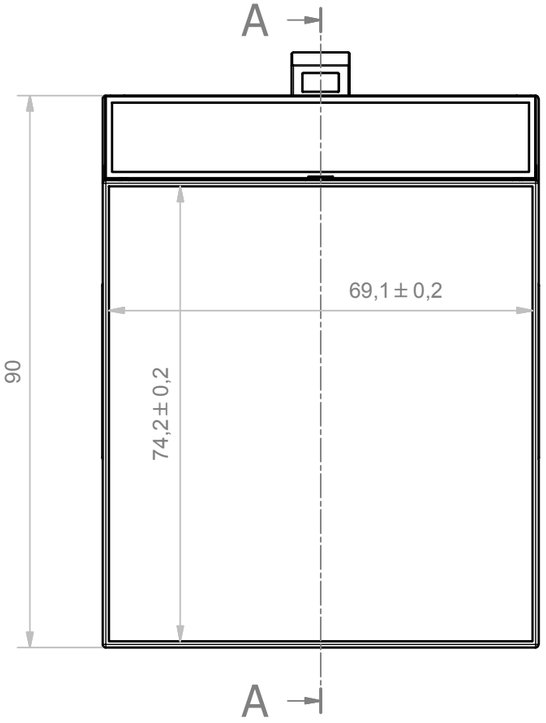

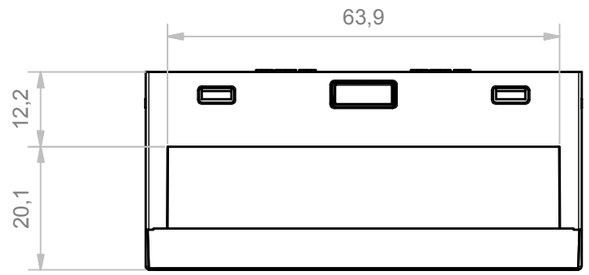

COMPONENTS LIST			
RIF.	Q.TY	DESCRIPTION	CODE
1	1	BASE 4M XT ARDUINO	M-05215
2	1	COPRIMORSETTO 4MPN - TERMINAL COVER 4MPN	M-00219
3	3	VITE d 2.9X6.5 TRONCA - SCREW 2.9X6.5 d TRUNC	PM10012021
4	1	AGGANCIO MODULBOX LUNGO- HOOK MODULBOX LONG	P05990002A
5	1	Corpo 4MHC33-B XTS compact Arduino Yun - Body 4MHC33-B XTS compact Arduino Yun	M-05840

Da 0,5 a 3	Oltre 3 fino a 6	Oltre 6 fino a 30	Oltre 30 fino a 120	Oltre 120
± 0,1	± 0,1	± 0,2	± 0,3	± 0,5

RESERVED PROPERTY
The present drawing cannot be reproduced or comunicated to 3d parties, even partially, without the authorization of ITALTRONIC Srl. Italtronic reserves to protect its own rights according to the law.

Dimension in mm

SHEET NR. 1 / 1

DRAWING BY
Manual modification are not allowed

GENERAL TOLERANCE
UNI EN 22768/1 Media (m)

Date: 08/05/2015

Replace nr.

Drawed: Rigato N.

Checked: Dalla Montà D.

Scale:

5 4 3 2 1
Revision description

italtronic
enclosures for electronics

Denomination:
KIT 4M XTS COMPACT ARDUINO YUN

Hitaltech
A group of connecting technologies

Drawing nr.
M-06002-00