GEFRAN

GTZ 25 / 40 / 55

THREE-PHASE SOLID STATE RELAYS WITH LOGIC CONTROL Vdc / Vac



Main applications

- *Thermoforming*
- *Plastic extrusion lines*
- *Industrial ovens and furnaces*
- *Heat treatments*
- *Control applications with high switching speed*
- *Mold heating/cooling control units*
- *Refrigeration*
- *Air conditioning*

Main features

- *Control input from VDC/VAC logic signal*
- *3-phase alternating current solid state relay with integrated hestsink*
- *Zero crossing switching*
- *3-phase nominal current 3x25/40/55A*
- *Nominal voltage up to 600VCArms*
- *Integrated SCR thermal protection with LED signal*
- *Optional alarm output (for interrupted load diagnostics or for SCR overtemperature*
- *Optoinsulation (input/output) 4000Vrms*
- *Integrated overvoltage suppressor*
- *Non-repetitive voltage up to 1200Vp*
- *Component selection to operate at max. declared current with ≤ 40°C temperature*
- *DIN bar mounting with fast clip-on*
- *In Conformity with EN60947-4-3 and UL508*

PROFILE

3-phase "zero crossing" power solid state unit for control of resistive and inductive loads, complete with aluminum heatsink and DIN guide connection.
Integrated device designed for industrial applications demanding control of high power levels and frequent switching, with loads up to 3x55A (AC51) at 400/480/600Vac.
Control is logic type (VDC or VAC), signaled by LEDs.
Each phase is controlled by means of semiconductors.
The constructive elements, special production process, and new, sturdy case, provide excellent reliability and continuity of service.
The device is sized for continuous operation at nominal current at room temperature of 40°C.
All versions are protected against overvoltages and against junction overtemperature, with signal LEDs and (optional) solid state alarm output.
An optional alarm output is available for interrupted load diagnostics.
The device is supplied complete with covers to protect against direct contacts (covers are removable for wiring).
Accessories available: fuses, fuse holders, support for panel mounting, thermostats and fans.

TECHNICAL DATA

General features

Category of use: AC51, AC53a

Nominal voltage (Ue):
400Vac (max. range 24...440Vac) (TRIAC)
480Vac (max. range 24..530Vac) (SCR)
600Vac (max. range 24..660Vac) (SCR)

Nominal frequency: 50/60Hz

Peak voltage:
<800Vp for models with Ue=400Vac
<1200Vp for models with Ue=480Vac, Ue=600Vac

Uninterrupted nominal service.

Critical dV/dt OFF-state:
500V/μs for models with Ue=400Vac
1000V/μs for models with Ue=480Vac, Ue=600Vac

Switching voltage for zero: < 20V

Activation time: ≤1/2 cycle

Deactivation time: ≤1/2 cycle

Potential drop at rated current: ≤ 1,4Vrms

IP20 protection

Weight:
GTZ 25:1100g
GTZ 40, 55:1350g

Control inputs

DC INPUT (Type "D"):
Voltage of command circuit (Uc): 5..32Vdc
Activation voltage: >4.5Vdc
Deactivation voltage: <3Vdc
Max. input: 18mA@5Vdc- 22mA@32Vdc
Max. reverse voltage: 36Vdc

AC INPUT (Type "A"):
Control voltage: 20...260Vac/Vdc
Activation voltage: > 15Vac/Vdc
Deactivation voltage: < 6Vac/Vdc
Current draw:
<= 8 mAac/dc@260Vac/Vdc
Additional fuse (3A max) shall be installed on the control input circuit.

Outputs

GTZ 25/...
Nominal current (Imax):
AC51: 3x25 A
AC53a: 3x5 A

GTZ 40/...
Nominal current (Imax):
AC51: 3x40 A
AC53a: 3x8 A

GTZ 55/...
Nominal current (Imax):
AC51: 3x55 A
AC53a: 3x15 A

Insulation

Nominal insulation voltage input/output:
2.5KV ac for models with Ue=400Vac
4KV ac for models with Ue=480Vac, Ue=600Vac
Nominal impulse withstand voltage (Uimp): 2500Vac

Ambient conditions

- Working temperature: -20°C...80°C
- Max. relative humidity: 50% to 40°C
- Max. installation altitude: 2000 slm
- Pollution level : 2
- Storage temperature: -20...85°C
- Class: A (industrial device)
- Suitable for use in pollution degree 2 environmental

Thermal protection

SCR temperature is constantly monitored inside the device.
If the maximum temperature limit is exceeded (T=110°C), current to the load is interrupted and the yellow signal LED lights up.

Options

Option -1
(Thermal protection alarm output).
The alarm output option activates closing of an isolated contact (max 32VAC/VDC, 150mA, conducting resistance <=15 ohm) when it detects the following fault condition: control signal active but SCR/ heatsink is in overtemperature (GTZ thermal protection)

Option -2
(Thermal protection alarm output and interrupted load).
Only for GTZ with Type "A" input.
The alarm output option activates closing of an isolated contact (max 32VAC/VDC, 150mA, conducting resistance <=15 ohm) when it detects the following fault conditions:
- Control signal active but no current in at least one three-phase branch (interrupted load)
- Control signal active but no power line voltage (no line)
- Control signal active but SCR / heatsink is in overtemperature (GTZ thermal protection). Maximum delay in tripping of load interrupt
alarm < 400ms.
Maximum length of wires between GS and load for correct operation of load diagnostics < 25m

Power supply

Fan supply (only for models GTZ 40/55A):
230Vac 14W (VEN90)
115Vac 14W (VEN91)
24Vdc 4W (VEN92)

Installation notes

Use the high speed fuses specified in the catalog according to the connection example provided.
Applications with solid state power units must also include an automatic safety switch to cut out the load power line.

FACEPLATE DESCRIPTION GTZ with DC control (Models GTZ-xx/xx-D-x)

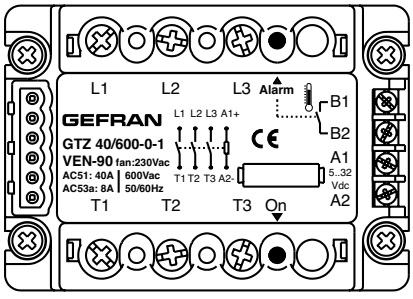

L1 :	Phase 1 input
L2 :	Phase 2 input
L3 :	Phase 3 input
T1 :	Phase 1 output
T2 :	Phase 2 output
T3 :	Phase 3 output
A1 :	Control signal (+)
A2 :	Control signal (-)
B1 :	Alarm output (option)
B2:	Alarm output (option)
Led ON:	Red led signal indicator
Led Alarm:	Yellow led (alarm overtemperature junction)

FACEPLATE DESCRIPTION GTZ with AC control (Models GTZ-xx/xx-A-x)

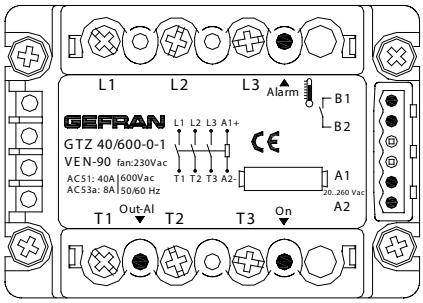

L1 :	Phase 1 input
L2 :	Phase 2 input
L3 :	Phase 3 input
T1 :	Phase 1 output
T2 :	Phase 2 output
T3 :	Phase 3 output
A1 :	Control signal (AC)
A2 :	Control signal (AC)
B1 :	Alarm output (option)
B2:	Alarm output (option)
Led ON:	Red led signal indicator
Led Alarm:	Yellow led (alarm overtemperature junction)
Led OUT-AL:	Red Led interrupted load alarm (with option 2 only)

For maximum reliability, the device MUST be installed correctly in the panel in order to have adequate heat exchange between the heatsink and the surrounding air under conditions of natural convection.
Mount it vertically (max.10 inclination from the vertical axis)
• Vertical distance between a heatsink and the panel wall >100mm
• Horizontal distance between a heatsink and the panel wall: 20mm at least
• Vertical distance between two heatsink: 300mm at least.
• Horizontal distance between two heatsink: 20mm. at least
Check that cable raceways do not reduce these distances; should it happen, mount the GTZ overhanging from the panel, so that the air can flow vertically on the heatsink without obstables.
• Maximum surrounding air temperature 40°C (for UL).
• Open type equipment

Limits of use

• dissipation of thermal power of device with restrictions on temperature of installation site.
• requires exchange with outside air or an air conditioner to transfer dissipated power outside the panel.
• installation requirements (distances between devices to guarantee dissipation under conditions of natural convection)
• max. voltage limits and derivative of transients in line, for which the solid state unit has internal protection devices.
• presence of dispersion current < 10mA (max. value with rated voltage and junction temperature of 125°C).

Short circuit protection

The product variants listed in the table "SCCR COORDINATION FUSES" are "Suitable For Use On A Circuit Capable Of Delivering Not More Than 100,000 A rms Symmetrical Amperes, 600 Volts Maximum when Protected by fuses.

Attention: the opening of the branch-circuit protective device may be an indication tha a fault has been interrupted. To reduce the risk of firee or electric shocks, current-carryng parts and other components of the device should be examinated and replaced if damaged. If burnout of the device occurs, the complete device must be replaced or equivalent.

TECHNICAL DATA OF THE MAIN CIRCUIT

Model	Imax Ie (*) [Arms]	Non-repetitive overcurrent t=20ms [A]	I^2t [A^2s]
GTZ 25/400	3x25	250	450
GTZ 25/480	3x25	400	645
GTZ 40/480	3x40	600	1010
GTZ 55/480	3x55	1150	6600
GTZ 40/600	3x40	600	1010
GTZ 55/600	3x55	1150	6600
(*) Ie = Nominal current (Standard CEI EN 60947-4-3)			

DIMENSIONS

Models: GTZ-25/xx-x-x (25A)

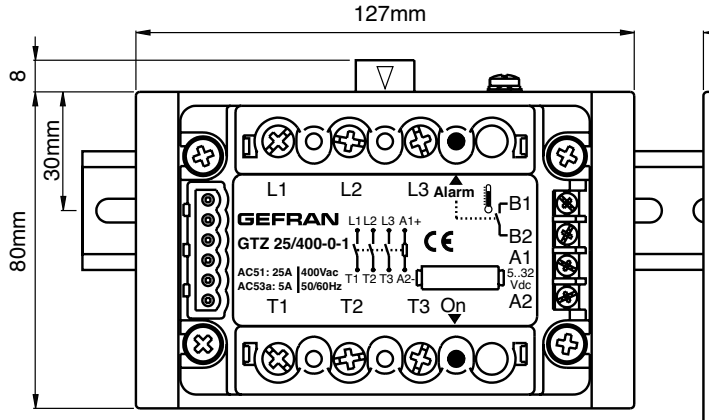

Models: GTZ-40/xx-x-x, GTZ-55/xx-x-x (40 and 55A)

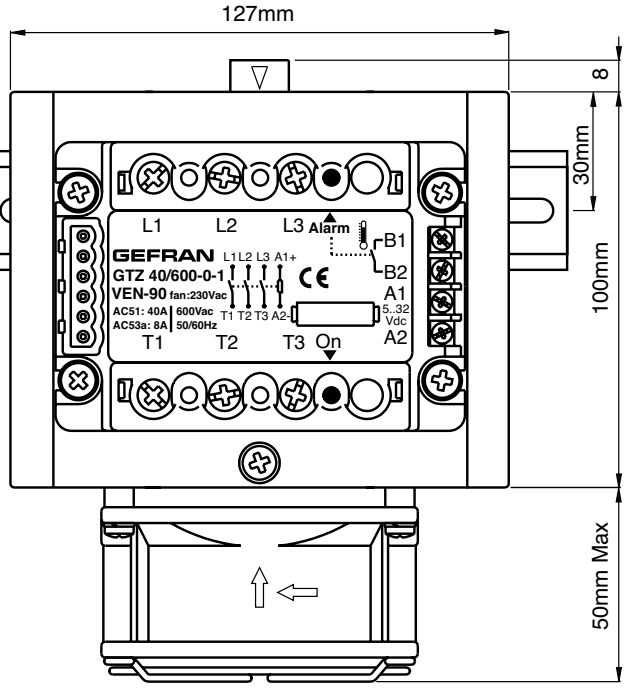

Depth:
- Models GTZ-xx/xx-D-x : 150 mm
- Models GTZ-xx/xx-A-x : 158 mm

TYPE OF OPERATION

ALARM OPTION – DC INPUT: FUNCTIONAL DIAGRAM:

THERMAL PROTECTION ALARM

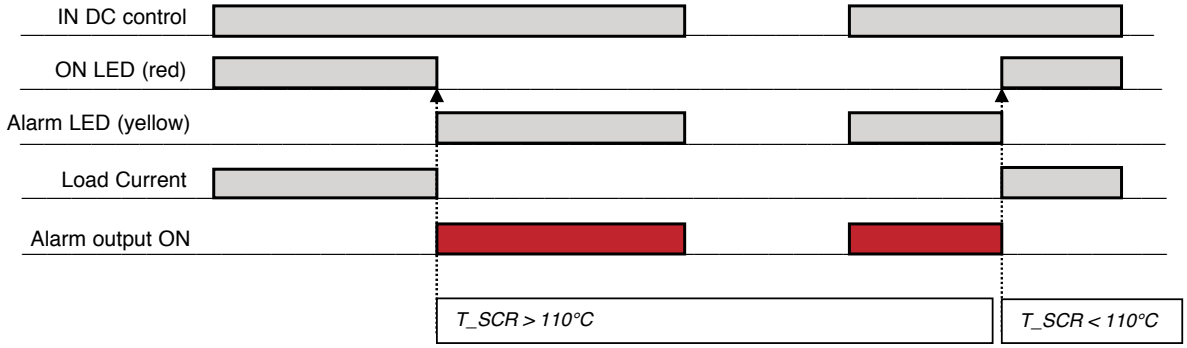

ALARM OPTION – AC INPUT: FUNCTIONAL DIAGRAM

THERMAL PROTECTION ALARM

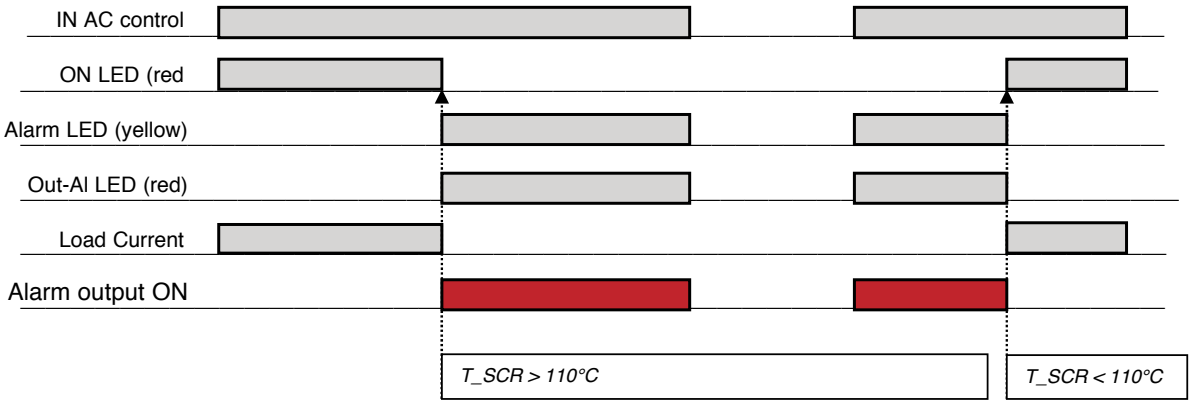

INTERRUPTED LOAD ALARM

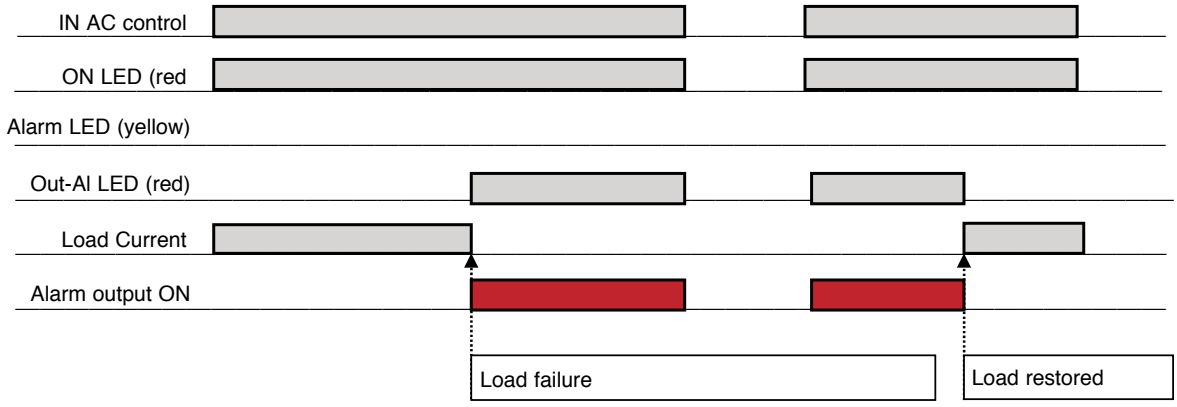

DISSIPATION DIAGRAMS

Rated current curves based on room temperature.

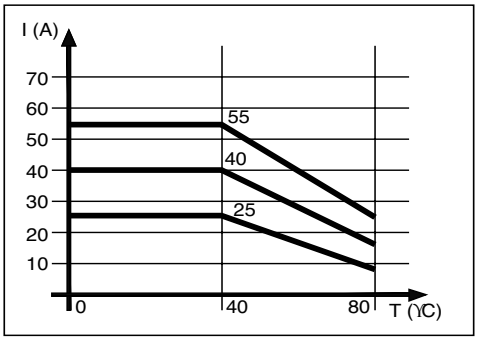

CONNECTION EXAMPLES - GTZ with DC control (Models GTZ-xx/xx-D-x)

Three-phase Triangle or Star connection (with and without neutral)

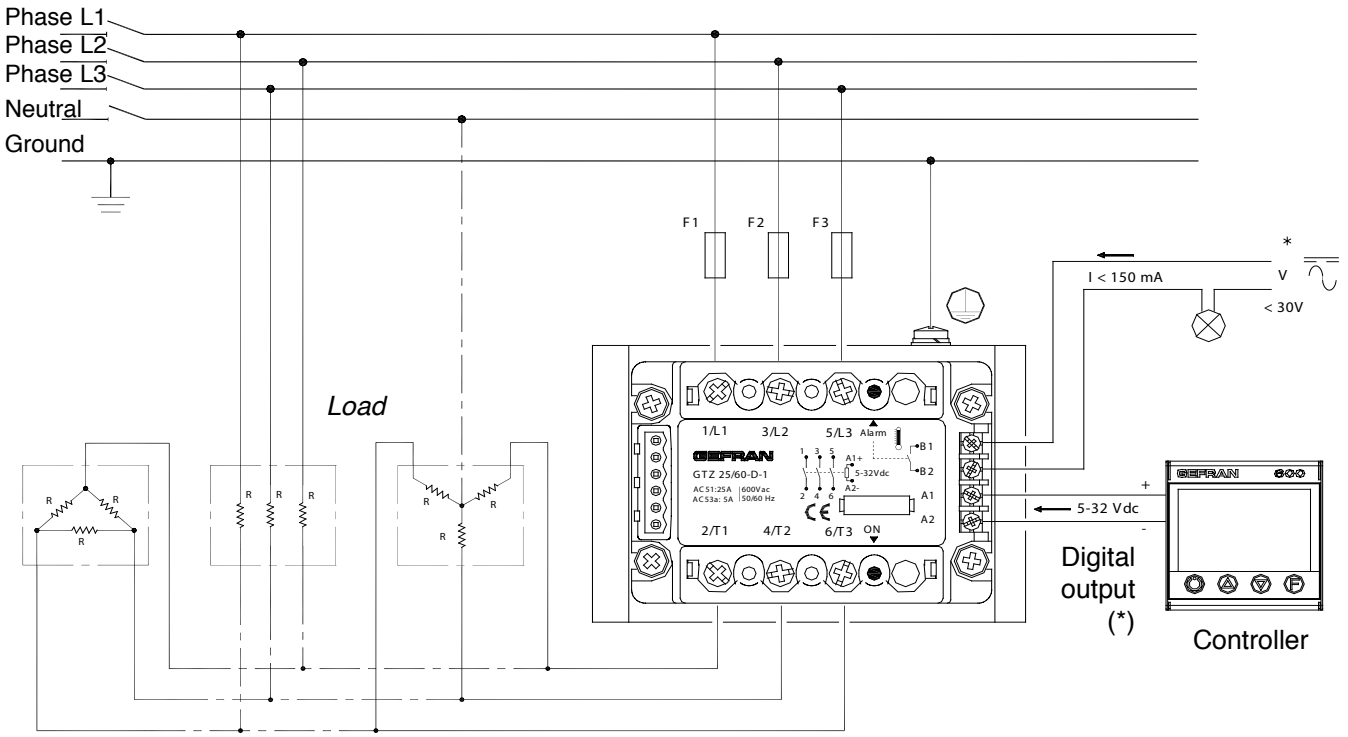

* Only in the version with option overtemperature alarm output

CONNECTION EXAMPLES - GTZ with AC control (Models GTZ-xx/xx-A-x)

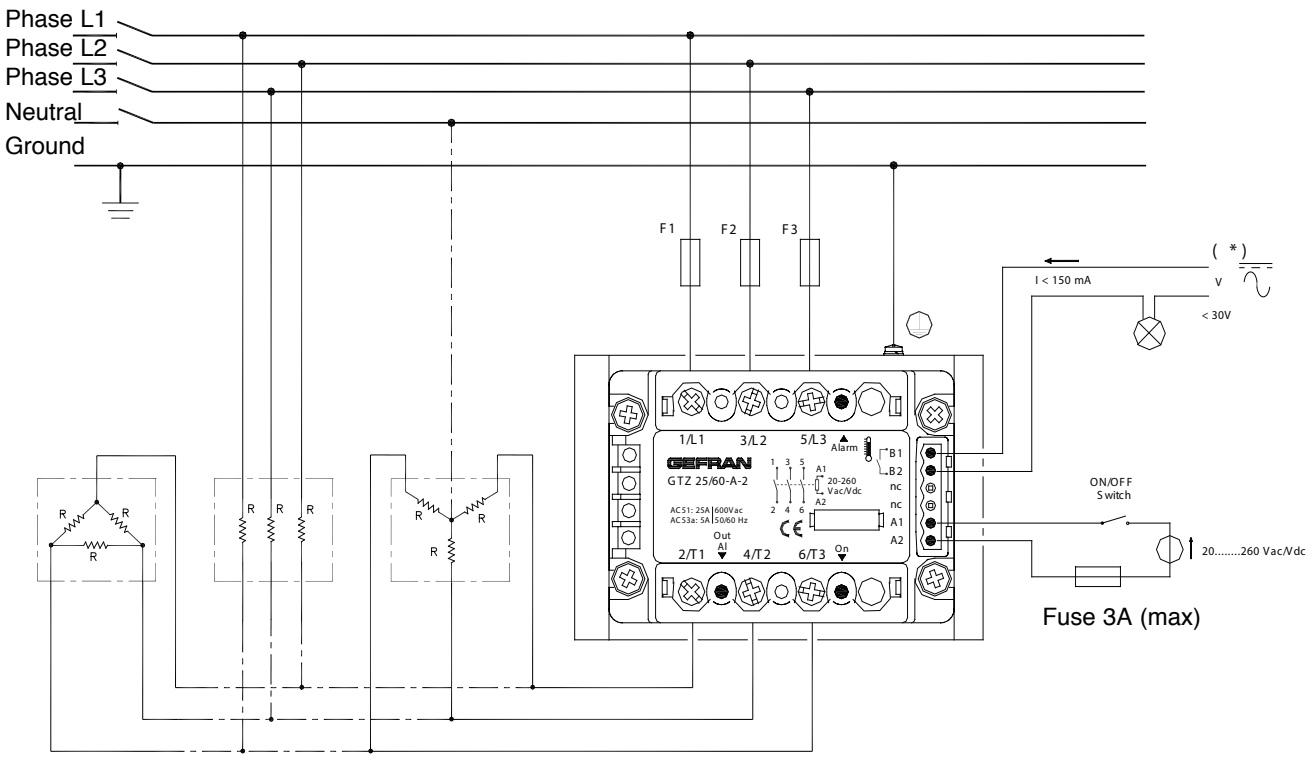

* Only in the version with option alarm output

TABLE OF TERMINALS AND CONDUCTORS

Model	I/O Control terminal (A1, A2, B1, B2)			Power terminal (L1, L2, L3, T1, T2, T3)		
	Contact area (LxP) screw type	Type of pre-insulated crimp connector	Wire section (*)/ tightening torque	Contact area (LxP) screw type	Type of pre-insulated crimp connector	Wire section(*) / tightening torque
GTZ 25...55A with DC control	6,3x9 M3	eye / fork / tip	min. 0.35 mm² max. 2,5 mm² 0,6 Nm Max	12x12 M5	eye / fork / tip	min. 1 mm² max. 10 mm² (tip)
GTZ 25...55A with AC control	Plug connector 2/6 pins	Stripped wire or tip	min. 0.25 mm² max. 2,5 mm² 0,5 Nm Max			min. 1 mm² max. 16 mm² (eye/ fork) 1,5 - 2,2 Nm

Model	Ground terminal (see note)	
	Contact area (LxD) screw type	Wire section (*)/ tightening torque
GTZ 25...40A	Area: 7x12 mm² Screw: self-threading 3.9x12 DIN7981	min. 1 mm² max. 16 mm² 1,5-1,8 Nm
GTZ 55A	Area: 12x12 mm² Screw: M5	min. 1 mm² max. 16 mm² 2 - 2,5 Nm

(*) The max. sections specified refer to unipolar copper wires isolated in PVC.
Note: For the ground terminal, you have to use an eye wire terminal.
(LxP) = width x depth [mm]

The minimum acceptable nominal section based on the nominal currents of the power solid state units is given below for copper conductors isolated in PVC, under continuous operating conditions and at 40°C ambient temperature according to standards CEI 44-5, CEI 17-11, IEC 408 in accordance with EN60204-1

Nominal current	Nominal section cable on mm²
10A	2,5
25A	6
40A	10
55A	16

Terminal covers
If an eye terminal lug is used, the terminal covers can be removed more easily by inserting a Phillips screwdriver (max. width 3.5 mm) into the side slots.
With the point of the screwdriver, widen the side of the cover and raise it.

Insert the screwdriver to facilitate opening of the cover

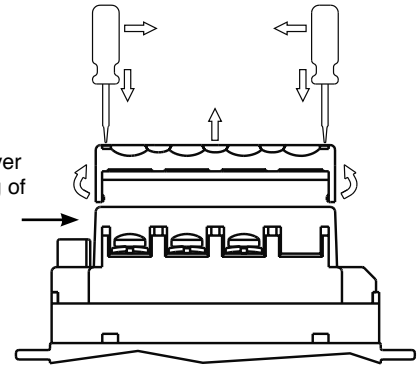

ACCESSORIES

A wide range of accessories is available heatsink, fuses and fuse holders , current transformer, supports to guide DIN, thermostats.
To choose accessories, see the section “Solid state relays - Accessories”.

EXTRARAPID FUSES

Model	i2t	Max Voltage	Size	Dimension mm	Fuse ordination code	Fuse holder ordination code	Notes
GTZ 10A	100	400	10A	10x38	FUS-10-L	PF-10x38	extractable
GTZ 25A	450	400	25A	12x32	FUS-025	PF-10x38	extractable
	645	480					
GTZ 40A	1010	480	40A	14x51	FUS-040	PF-14x51	extractable
		600					
GTZ 55A	6600	480	63A	22x58	FUS-063	PF-22x58	extractable
		600					

SCCR COORDINATION FUSES

Model	Short circuit current [Arms]	Max fuse size [A]	Bussmann Model Number	Max Voltage [VAC]
GTZ 25	100.000	25	DFJ-25	600
GTZ 40	100.000	40	DFJ-40	600
GTZ 55	100.000	80	DFJ-80	600

The fuses on the above table are representative of all the Bussmann DFJ fuses with lower current ratings
The devices protected with the fuses reported above, still be functional after the short circuit

ORDER CODE

GTZ [ ] / [ ] - [ ] - [ ] - [ ]

MODEL	
	GTZ

NOMINAL CURRENT	
25Aac	**25**
25Aac (*)	**25B**
40Aac	**40**
55Aac	**55**

NOMINAL VOLTAGE	
400Vac (only for 25A models and only with type "D" input)	**40**
480Vac	**48**
600Vac	**60**

(*) Version with high melt energy (I²t) short circuit-proof using a specific circuit breaker

FAN (for mod. 40A and 55A)	
VEN-90	Fan 80x80x40 230V 14W
VEN-91	Fan 80x80x40 115V 14W
VEN-92	Fan 80x80x25 24Vdc 4W

OPTIONS	
0	None
1	Alarm output thermal protection
2	Alarm output for interrupted load diagnostics and thermal protection. (Available ONLY with type "A" input)

INPUT	
D	5...32Vdc
A	20 ... 260 Vac/Vdc

Please contact GEFRAN personnel for information on availability of codes.

GEFRAN spa reserves the right to make any kind of design or functional modification at any moment without prior notice

•WARNINGS

WARNING: this symbol indicates danger.

Read the following warnings before installing, connecting or using the device:
If the power solid state unit is used in applications with risk of injury to people, machines, or materials, auxiliary alarm devices must be employed. It is also advisable to be able to check for tripping of alarms during normal operation;
• follow instructions precisely when connecting the heatsink;
• always use cables that are suitable for the voltage and current levels indicated in the technical specifications;
• DO NOT operate the device in rooms with dangerous (inflammable or explosive) atmosphere;
• During continuous operation, the heat sink can reach up to 100°C, and stays at a high temperature even after the device is turned off due to thermal inertia; therefore, DO NOT touch it and avoid contact with electrical wires;
• do not work on the power part without first disconnecting electrical power to the panel;
• do not remove the cover when the device is powered!
Installation:
• ground the heatsink connected to the power module;
• power supply lines must be separated from device input and output lines; always check that the supply voltage matches the voltage indicated on the device label;
• avoid dust, humidity, corrosive gases and heat sources;
• respect the installation distances between one device and another (to allow for dissipation of generated heat).
• to keep air in movement, we advise you to install a fan near the GTZ group in the electrical panel containing the GTZs.;
Maintenance:
• at regular intervals, check operation of the cooling fans and clean all air ventilation filters;
• repairs must be done out only by trained and specialized personnel. Cut power to the device before accessing internal parts.
• do not clean the box with solvents derived from hydrocarbons (trichloroethylene, gasoline, etc.). Using such solvents will compromise the device's mechanical reliability. Use a clean cloth moistened with ethyl alcohol or water to clean external parts in plastic.
Service:
GEFRAN has a service department.
The warranty excludes defects caused by any use not conforming to these instructions.

SCCR RMS SYM 100KA / 600V	100KA when protected by proper fuse
EAC	Conformity C/CSA/US CoFC no. **70051156**
CSA	In conformity to ECC 2014/30/EU and 2014/35/EU and following modification with reference to standard **EN 60947-4-3** (Low voltage equipment - AC Semiconductor starters and contactors)
CE	In Conformity with **UL508 - File: E243386**
UL	Il dispositivo è conforme alla norma **UL508 - File: E243386**

GEFRAN spa
via Sebina, 74
25050 Provaglio d'Iseo (BS)
Tel. +39 030 9888.1 - fax +39 030 9839063
Internet: http://www.gefran.com

GEFRAN