Adjustable toggle latches with secondary lock and strike

NEW!



Part number	Material	Finish	A	B	C	Weight (g)
16-1-9022	steel	zinc plated	70	27.5	13.5	77
16-1-9021	stainless steel	electropolished	70	27.5	13.5	77

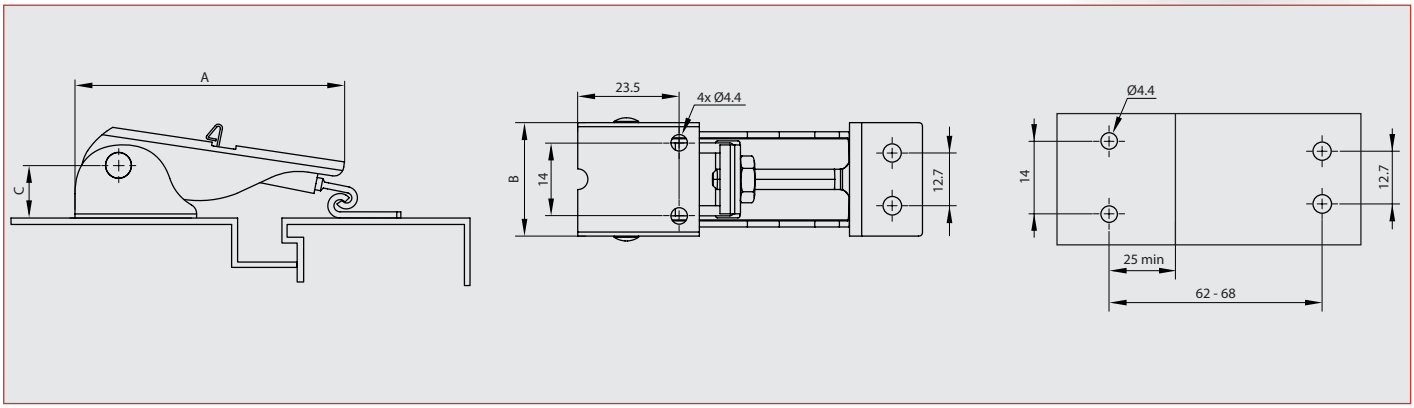

Adjustable toggle latches without strike 70.6 mm

These latches are used with strike part numbers 16-7-3939 and 16-7-3940.
Part number 16-7-3934 has a lockable nut.



Part number	Material	Finish	A	B	C	Weight (g)
16-7-3932	steel	zinc plated	70.6	28.2	16	50
16-7-3934	steel	zinc plated	70.6	28.2	16	50
16-7-3933	304 stainless steel	raw	70.6	28.2	16	50

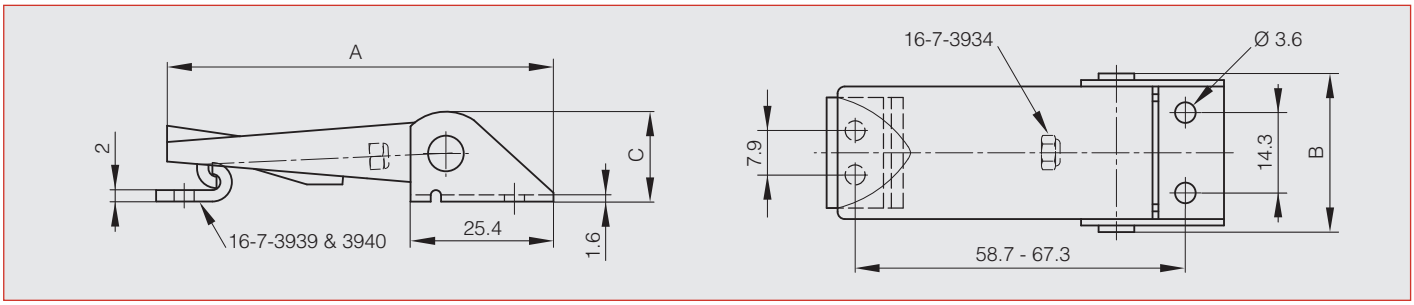

Strikes for part numbers 16-7-3932, 16-7-3933 and 16-7-3934

Part number	Material	Finish	Weight (g)
16-7-3939	steel	zinc plated	4.5
16-7-3940	304 stainless steel	raw	4.5

