DATASHEET - DX-KEY-LED2



Keypad with LED display for DA1 and DC1 variable frequency drives

Part no.	**DX-KEY-LED2**
Catalog No.	**186946**
Alternate Catalog No.	**DX-KEY-LED2**
EL-Nummer (Norway)	**4137449**

Delivery program

Subrange		HMI device
Description		With 7-digital display assembly Front IP54 With approx. 3 m-long, plug-in connection cable (RJ45, 8-pin)
Length	m	3
For use with		DE1, DE11, DC1, DA1
Successor to 169132		

Design verification as per IEC/EN 61439

Technical data for design verification		
Operating ambient temperature min.	°C	-10
Operating ambient temperature max.	°C	50
IEC/EN 61439 design verification		
10.2 Strength of materials and parts		
10.2.2 Corrosion resistance		Meets the product standard's requirements.
10.2.3.1 Verification of thermal stability of enclosures		Meets the product standard's requirements.
10.2.3.2 Verification of resistance of insulating materials to normal heat		Meets the product standard's requirements.
10.2.3.3 Verification of resistance of insulating materials to abnormal heat and fire due to internal electric effects		Meets the product standard's requirements.
10.2.4 Resistance to ultra-violet (UV) radiation		Please enquire
10.2.5 Lifting		Does not apply, since the entire switchgear needs to be evaluated.
10.2.6 Mechanical impact		Does not apply, since the entire switchgear needs to be evaluated.
10.2.7 Inscriptions		Meets the product standard's requirements.
10.3 Degree of protection of ASSEMBLIES		Does not apply, since the entire switchgear needs to be evaluated.
10.4 Clearances and creepage distances		Meets the product standard's requirements.
10.5 Protection against electric shock		Does not apply, since the entire switchgear needs to be evaluated.
10.6 Incorporation of switching devices and components		Does not apply, since the entire switchgear needs to be evaluated.
10.7 Internal electrical circuits and connections		Is the panel builder's responsibility.
10.8 Connections for external conductors		Is the panel builder's responsibility.
10.9 Insulation properties		
10.9.2 Power-frequency electric strength		Is the panel builder's responsibility.
10.9.3 Impulse withstand voltage		Is the panel builder's responsibility.
10.9.4 Testing of enclosures made of insulating material		Is the panel builder's responsibility.
10.10 Temperature rise		The panel builder is responsible for the temperature rise calculation. Eaton will provide heat dissipation data for the devices.
10.11 Short-circuit rating		Is the panel builder's responsibility. The specifications for the switchgear must be observed.
10.12 Electromagnetic compatibility		Is the panel builder's responsibility. The specifications for the switchgear must be observed.
10.13 Mechanical function		The device meets the requirements, provided the information in the instruction leaflet (IL) is observed.

Technical data ETIM 7.0

Low-voltage industrial components (EG000017) / Accessories for frequency controller (EC002025)		
Electric engineering, automation, process control engineering / Electrical drive / Static frequency converter / Static frequency converter (accessory) (ecl@ss10.0.1-27-02-31-92 [AFR303003])		
Type of accessory		Control panel

Approvals

Product Standards	UL 508C; CSA-C22.2 No. 14; IEC/EN61800-3; IEC/EN61800-5; CE marking
UL File No.	E172143
UL Category Control No.	NMMS, NMMS7
CSA File No.	UL report applies to both US and Canada
North America Certification	UL listed, certified by UL for use in Canada
Specially designed for North America	No
Suitable for	Branch circuits
Degree of Protection	IEC: IP00

Dimensions

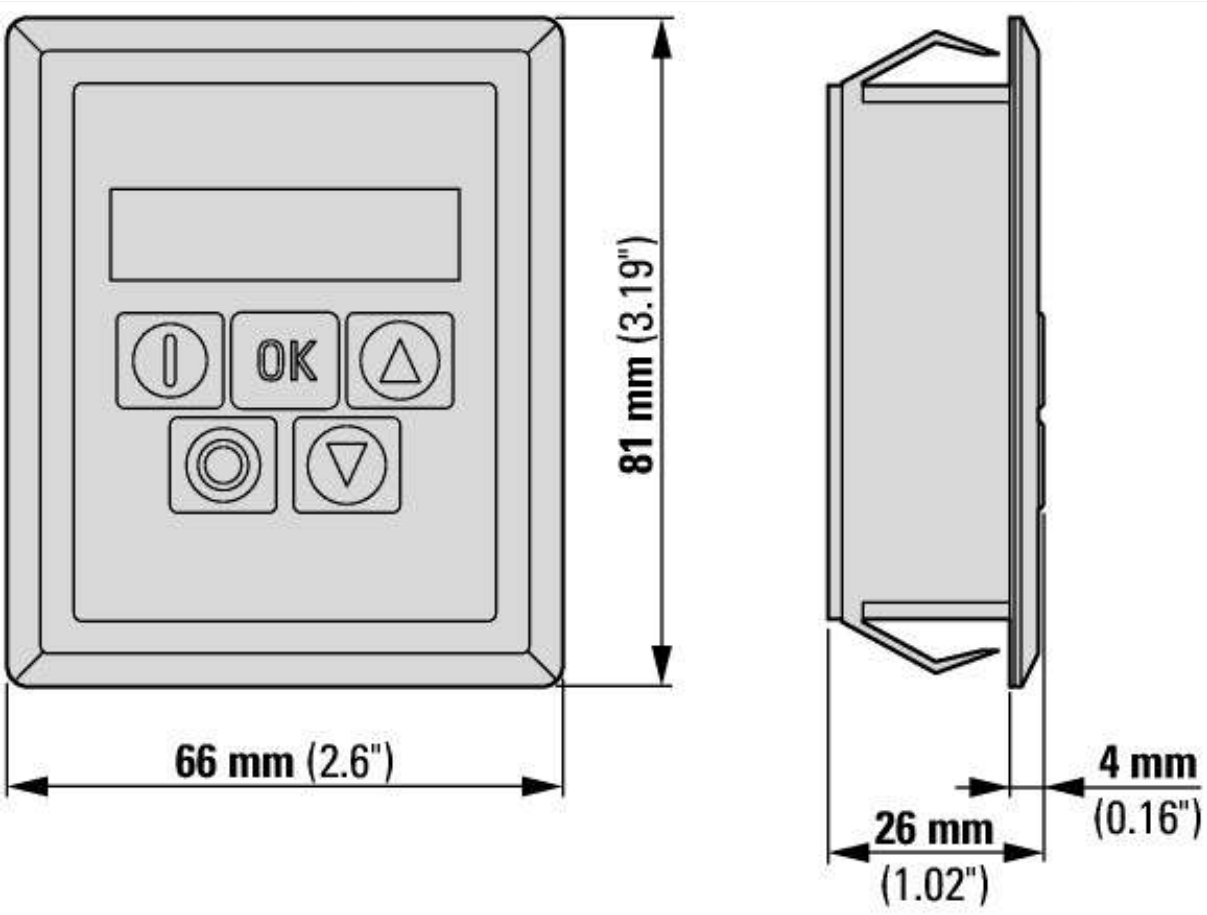

Assets (links)

Declaration of CE Conformity

00003239

Instruction Leaflets

IL04012020Z2018_05

Manuals

MN04020003Z_DE (German)
MN04020003Z_EN (English)
MN04020003Z_IT (Italian)
MN04020005Z_DE (German)
MN04020005Z_EN (English)

Additional product information (links)

IL04012020Z Remote Keypad LED/OLED	
IL04012020Z Remote Keypad LED/OLED	ftp://ftp.moeller.net/DOCUMENTATION/AWA_INSTRUCTIONS/IL04012020Z2019_06.pdf
MN04020003Z DC1 variable frequency drives, Installation manual	
MN04020003Z Frequenzumrichter DC1, Installationshandbuch - Deutsch	ftp://ftp.moeller.net/DOCUMENTATION/AWB_MANUALS/MN04020003Z_DE.pdf
MN04020003Z DC1 variable frequency drives, Installation manual - English	ftp://ftp.moeller.net/DOCUMENTATION/AWB_MANUALS/MN04020003Z_EN.pdf
MN04020003Z Frekvenční měnič DC1, manuál Instalace - čeština	ftp://ftp.moeller.net/DOCUMENTATION/AWB_MANUALS/MN04020003Z_CZ.pdf

MN04020003Z Convertitore di frequenza DC1, manuale Installazione - italiano	ftp://ftp.moeller.net/DOCUMENTATION/AWB_MANUALS/MN04020003Z_IT.pdf
MN04020005Z DA1 variable frequency drives, Installation manual	
MN04020005Z Frequenzumrichter DA1, Installationshandbuch - Deutsch	ftp://ftp.moeller.net/DOCUMENTATION/AWB_MANUALS/MN04020005Z_DE.pdf
MN04020005Z DA1 variable frequency drives, Installation manual - English	ftp://ftp.moeller.net/DOCUMENTATION/AWB_MANUALS/MN04020005Z_EN.pdf
MN04020005Z Convertitore di frequenza DA1, manuale Installazione - italiano	ftp://ftp.moeller.net/DOCUMENTATION/AWB_MANUALS/MN04020005Z_IT.pdf
CA04020001Z-EN Product Range Catalog: Efficient Engineering for Starting and Controlling Motors	http://www.eaton.eu/DE/ecm/groups/public/@pub/@europe/@electrical/documents/content/pct_1095238.pdf

© 11/2019 by Eaton Industries GmbH