E43034

Process adapter Varivent

ADAPT G1/2-VARIVENT D50 3A

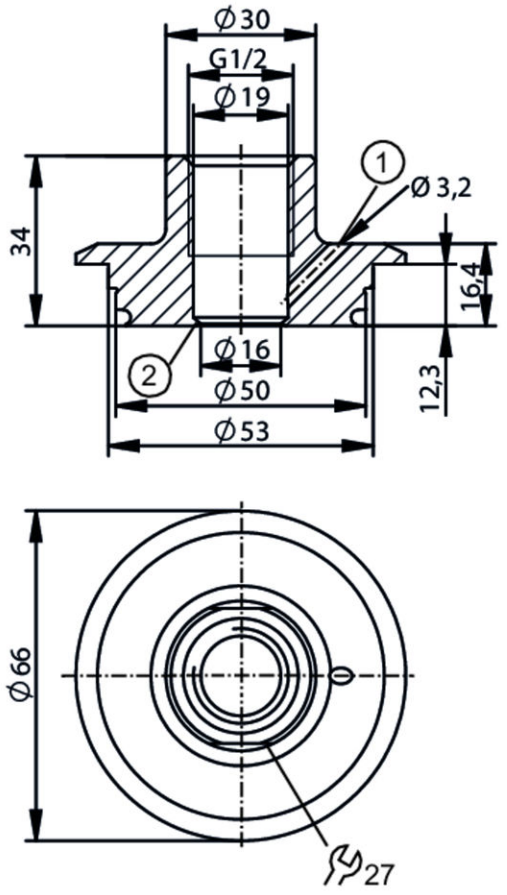

1 Leakage port
2 sealing edge

EC 1935/2004 EHEDG Certified FCM FDA

Application		
Design		with leakage port
Pressure rating	[bar]	25
Note on pressure rating		for the connection sensor - adapter
Tests / approvals		
Pressure Equipment Directive		A possible classification to PED depends on the application and has to be carried out by the user / operator.
Pressure Equipment Directive EAC		The adapter is intended for use in devices, machines and installations that do not fall under the categories of the technical rule TR CU 032/2013.
Safety instructions		The compatibility between medium and product material has to be checked in all applications.
Mechanical data		
Weight	[g]	390.2
Materials		stainless steel (1.4435 / 316L); surface characteristics Ra>0,4 / Rz 4
Sensor connection		G 1/2 sealing cone
Process connection		Varivent Form F, DN25 (1"), Ø 50 mm
Hygienic equipment class to DIN 11866		H4

E43034

Process adapter Varivent

ADAPT G1/2-VARIVENT D50 3A

Remarks	
Pack quantity	1 pcs.