Brand of NTN corporation

Technical data

USPAE205

Bearing units



Grey cast housing, radial insert ball bearing with socket set screws, single lip seal

KIT CONTENT

US205G2, PAE205

VISUAL (S)

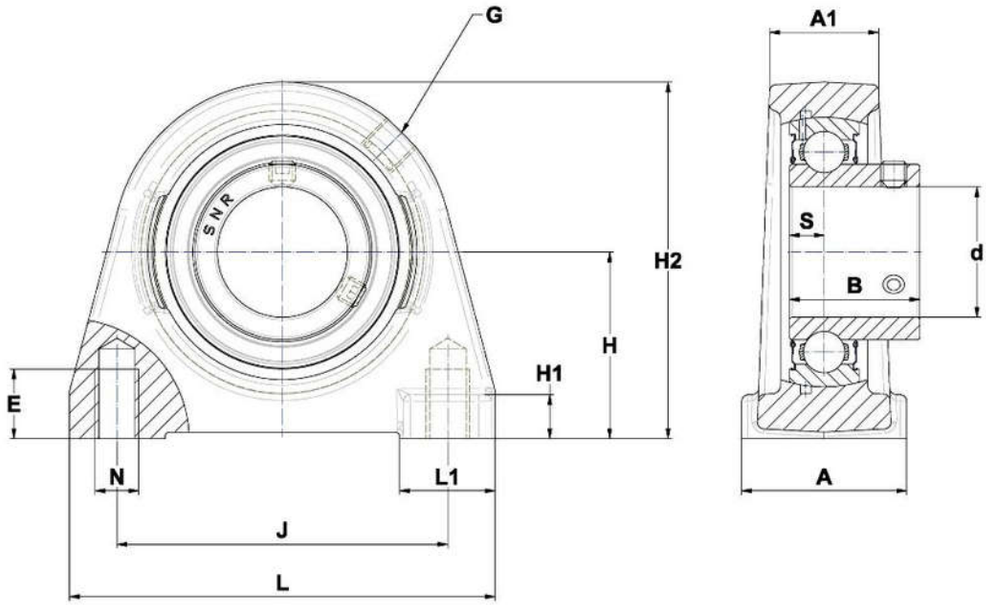

PRODUCT DEFINITION

Brand	SNR
A - Housing width	36 mm
A1 - Housing top width	21 mm
B - Width of Inner Ring	27 mm
d - Shaft diameter	25 mm
E - Mounting hole thread depth	12,5 mm

PRODUCT DEFINITION	
G - Grease fitting	R1/8"
H - Distance mounting base to centerline spheric. seating diam.	36,5 mm
H1 - Housing foot height	10 mm
H2 - Housing height	70 mm
J - Mounting holes distance	50,8 mm
L - Housing length	70 mm
L1 - Housing foot length	21 mm
N - Mounting hole dimension	M10
S - Distance front side/bearing centre	7,5 mm

PRODUCT PERFORMANCE	
C - Dynamic load rating	14000000 mN
C0 - Static load rating	7880000 mN
Operating temperature min.	253,15 °K
Operating temperature max.	373,15 °K

OTHER FEATURES	
Mass	0,57 kg
Recommended tightening torque for set screw	5.5 N-m