MINISTART
Softstarter
UH 9018



Your Advantages
- Protection of the drive unit
- Integrated bridging contactor (Bypass)
- Easy operation
- Comprehensive diagnostic via LED-flashing codes possible

Features
- Softstart with softstop
- For motors from 1.5 kW to 7.5 kW
- 2-phase control
- Adjustable ramp time, starting torque and starting voltage
- Kickstart-(Boost-)function
- DIN-rail mounting
- Width: 45 mm

Product Description

The softstarter UH 9018 is an electronic device designed to enable 1-phase or 3-phase induction motors to start smoothly. The devices slowly ramps up the current on two phases, therefore allowing the motor torque to build up slowly.This reduces the mechanical stress on the machine and prevents damage to conveyed material. These features allow cost saving constructions of mechanical gear.
When the motor is up to full speed the power semiconductors in UH 9018 are bridged to prevent internal power losses and heat build up. In addition UH 9018 allows a softstop function prolonging the stop time of the motor, preventing high counter torques from abruptly stopping the motor.

Approvals and Markings

CE

Applications

- Motors with gear, belt or chain drive
- Fans, pumps, conveyor systems, compresseors
- Woodworking machines, centrifuges
- Packaging machines, door drives
- Start current limiting on 3 phase motors

Function Diagram

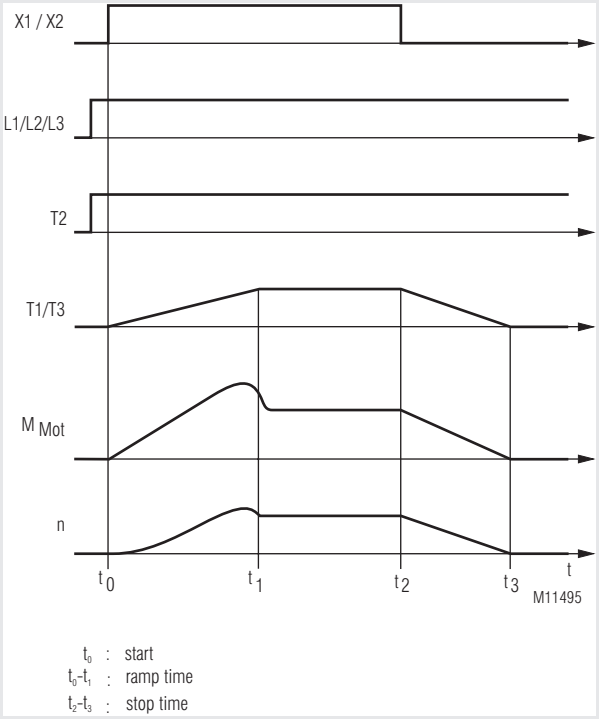

Indication

green LED:	power connected
yellow LED:	flashes with rising or falling speed at softstart-softstop
	flashes with same frequency at error

Notes

The motor load must always be connected as continuous operation of the softstart with no load may cause overheating of the motor and softstart. It is recommended that the softstart is protected by superfast semicondutor fuses rated as per the current rating of the softstart or motor. However, standard line and motor protection is acceptable, but for high starting frequencies motor winding temperature monitoring is recommended.

All technical data in this list relate to the state at the moment of edition. We reserve the rigth for technical improvements and changes at any time

Block Diagram

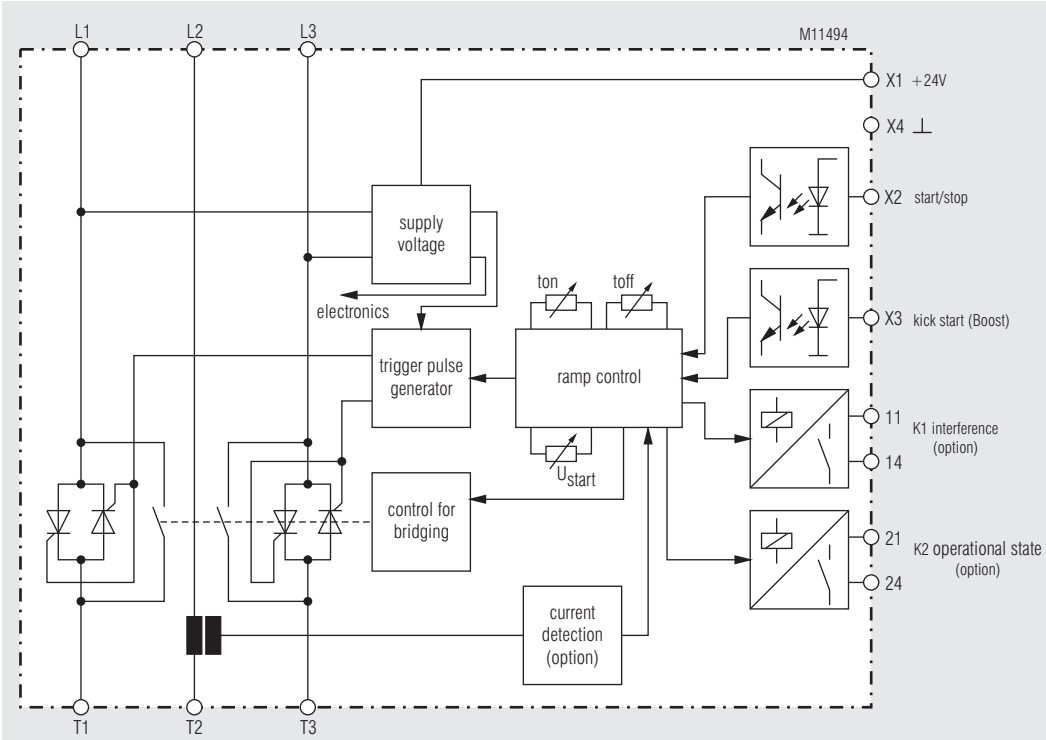

Circuit Diagram

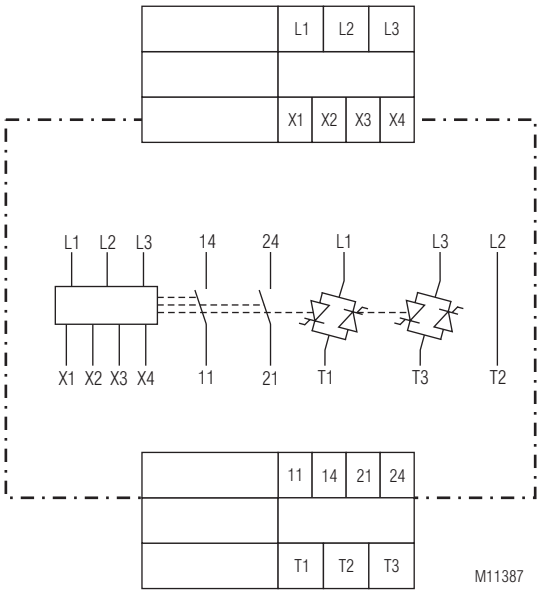

Connection Terminals

UH9018/_ 0 _ :

Terminal designation	Signal description
L1, L2, L3	Connection nominal voltage (L1, L2, L3)
T1, T2, T3	Connection Motor (U, V, W)
X1, X2	Control input (Start/Stop)
X1, X3	Control input (Kickstart (Boost))
X4	Earth connection
11, 14	Indicator relay K1, NO contact (error)
21, 24	Indicator relay K2, NO contact (operating condition)

UH9018/_ 1 _ :

Terminal designation	Signal description
L1, L2, L3	Connection nominal voltage (L1, L2, L3)
T1, T2, T3	Connection Motor (U, V, W)
X1, X2	Control input (Start/Stop)
X3, X4	Connection for Motor PTC
11, 14	Indicator relay K1, NO contact (error)
21, 24	Indicator relay K2, NO contact (operating condition)

Technical Data

Nominal voltage:	3 AC 400 V ± 10 % Special voltages: 230 V; 480 V; Wide voltage input 200 ... 480 V only with external voltage DC 24 V an X1 / X4			
Nominal frequency [Hz]:	50 / 60			
Rated current [A]:	3.5	6.5	12	16
Nominal motor power at P_N 400 V [kW]:	1.5	3	5.5	7.5
Min. motor power:	approx. 0.2 P_N			
Starting voltage (at devices with voltage ramp):	40 ... 80 % U_N			
Setting range current limit (at devices with current control):	2 ... 5 I_N			
Setting range starting time (at devices with voltage ramp) [s]:	0.5 ... 10			
Deceleration time [s]:	0.25 ... 10			
Setting range of the gradient of current rise (at devices with current control) [%]:	0 ... 100			
Recovery time [ms]:	300			
Switching frequency at 3 x I_N and t_{on} = 5 s:	150/h	70/h	30/h	15/h
Semiconductor fuse I^2t-value [A^2s]:	390	390	720	720

General Data

Temperature range: 0 ... + 45°C
Storage temperature: - 25 ... + 70°C
Altitude: up to 1.000 m
Degree of protection: IP 20
Climate resistance: 25 / 075 / 04 IEC/EN 60 068-1
Wire connection
Load terminals: up to 2.5 mm^2
Control terminals: 1 x 1,5 mm^2 solid
Mounting: DIN-rail mounting
Weight: 400 g

Dimensions

Width x height x depth: 45 x 107 x 121 mm

Standard Types

UH 9018 3 AC 400 V 50/60 Hz 1.5 kW
Article number: 0066471
- Nominal voltage: 3 AC 400 V
- Nominal motor power: 1.5 kW
- Width: 45 mm
- With Kickstart- (Boost-) function
- With voltage ramp
- Starting time: 0.5 ... 10 s
- Deceleration time: 0.25 ... 10 s
- Starting voltage: 40 ... 80 % U_N

UH 9018/110 3 AC 400 V 50/60 Hz 7.5 kW
Article number: 0068626
- Nominal voltage: 3 AC 400 V
- Nominal motor power: 7.5 kW
- Width: 45 mm
- With connection option for Motor-PTC
- With heat sink PTC
- With 2 Indicator relays: K1 (11, 14): Alarm
  K2 (21, 24): Operating condition
- With current control
- Adjustment of the gradient of current rise: 0 ... 100 %
- Current limit: 2 ... 5 x I_N
- Deceleration time: 0.25 ... 10 s

Ordering example

UH 9018 /_ _ _ 3 AC 400 V 50/60 Hz 1.5 kW

- 1.5 kW — Nominal motor power
- 50/60 Hz — Nominal frequency
- 3 AC 400 V — Nominal voltage
- /_ _ _ — Variant, if required
- UH 9018 — Type

Control Inputs

As described in Principles of operation UH 9018 are normally controlled by a voltfree contact on terminals X1-X2.
However, if external DC voltage control is desired UH 9018 can be set at the factory to accept a DC control voltage of 10 ... 42 V DC at terminals X2, X4.

When the voltfree contact across terminals X1 and X2 is closed, the soft-start function will commence. When the contact is opened, the softstop function will commence.

The motor can be started with a boost (variants UH 9018/_0_) with the help of a potential-free contact on X1, X3. Thereby at the beginning of the soft starting, the motor voltage increases for a short impulse (500 ms) to 85% of the nominal voltage. This function effects an increased breakaway torque in the drive and makes possible the starting of the drives with a high holding torque at standstill. Afterwards, the soft starting continues with the adjusted voltage ramp.
Optionally, the boost function can be started also with external control voltage of DC 10 ... 24 V on X3, X4.
The device variants UH 9018/_1_ do not have a boost function. A motor PTC can be connected there to the control terminals X3, X4 for monitoring the motor temperature.

If no motor PTC is connected to the devices /_1_, a bridge must be connected between terminals X3, X4.

Setting facilities

Devices with voltage ramp UH 9018/0_ _:

Potentiometer	Description	Initial setting
U_{start} t_{on} t_{off}	starting voltage ramp up time deceleration time	fully anti-clockwise middle of scale fully anti-clockwise

Devices with current control UH 9018/1_ _:

Potentiometer	Description	Initial setting
x I_N t_{int} t_{off}	Current limit gradient of current rise deceleration time	middle of scale middle of scale fully anti-clockwise

Set up Procedure

Softstart with voltage ramp:

1. Start the motor via control input X1/X2 and turn potentiometer "U_{start}" up until the motor starts to turn without excessive humming

2. Adjust potentiometer "t_{on}" to give desired ramp time.

Attention: If the ramp-up time is adjusted to short, the internal bridging contact closes before the motor is on full speed. This may damage the bridging contactor or bridging relay.

Softstart with current control:

The motor is accelerated to the motor nominal speed at the preset current limit of 2 … 5 xI_N. To this purpose, the desired start-up current is set with the potentiometer xI_N with respect to the nominal speed of the device. The gradient of the increase of the current can be adjusted with the potentiometer tint and thus the control characteristics and the motor acceleration can be adapted to the drive. The motor current is measured in the uncontrolled phase L2/T2 which in the case of two-phase-controlled soft-start devices, for technical reasons, conducts the highest current. The preset current limit is related to the motor current in phase L2/T2. The current in the two other motor phases is lower by about 35 %.

Attention: If the current limit is set too low, the motor will not accelerate to full speed and will remain in a state of intermediate speed. After a certain time, the device will interrupt the starting process and will change to fault mode in order not to overload the device and the motor. What is important in the selection of the current limit is to pay attention to the changes in the load, e.g. with the time (mechanical change, wear, ...) or also the thermal changes, etc. The adjustment must be such that also in the worst-case scenario the drive can accelerate to full speed without problems.

Softstop:

- During softstop the device has to be connected to the voltage.
- Select softstop by opening control input X1/X2.
- Adjust t_{off} until the required stopping time is achieved.

Fault

The UH 9018 monitors different fault states. If a fault is recognised, the device signalises the error by blinking of the yellow LED at a constant frequency. When there is a fault, the signal relay K1 is opened. The different error states are indicated by different blinking sequences of the yellow LED.

Fault Description

Fault	yellow LED flasches	operating condition
1	1 x time with short space	undervoltage Electronic power supply
2	2 x times with short space	heat sink temperature to high Device thermally overloaded or motor overtemperature (at connected motor-PTC) variant / _1_
3	3 x times with short space	current control time out
4	4 x times with short space	Zero crossings error Network or motor circuit is faulty
5	5 x times with short space	phase failure in phase 1
6	6 x times with short space	phase failure in phase 2
7	7 x times with short space	phase failure in phase 3
8	8 x times with short space	firing error in phase 1
9	10 x times with short space	firing error in phase 3
10	11 x times with short space	failure in electronics

Troubleshooting

In the case of a fault it is proceeded as follows:

Fault 1: Defect in the internal control electronics. The device must be checked by the manufacturer.

Fault 2: Check the starting frequency and the starting current or the maximum ambient temperature. Leave the device to cool off. The dissipation of the heat can be improved by forced cooling-off with a fan installed under the device.

Fault 3: The motor does not reach the end speed with the preset maximum starting current. The value of the starting current can be increased with the potentiometer xI_N.

Attention!

After a performed disconnection due to a timeout, the device and the motor must be given a chance to cool off. An immediate start-up can lead to destruction.

Fault 4-7: The power supply is missing, the motor circuit is interrupted, the power semiconductor is defective, the motor is defective; check the motor and the wiring. Send the device to be checked by the manufacturer.

Fault 8-9: Check the motor wiring or defective thyristor module. Send the device to be checked by the manufacturer.

Fault 10: Send the device to be checked by the manufacturer.

Resetting the fault

There are two possibilities for resetting a device fault.

1. As default, the resetting of the fault message takes place by turning off and then on the power supply.
2. The device can be programmed in such a way that a fault reset is possible by a new start-up (opening and then closing the start input). To this purpose, the following approach must be observed.

   First the device must be wired according to the following connection diagrams:

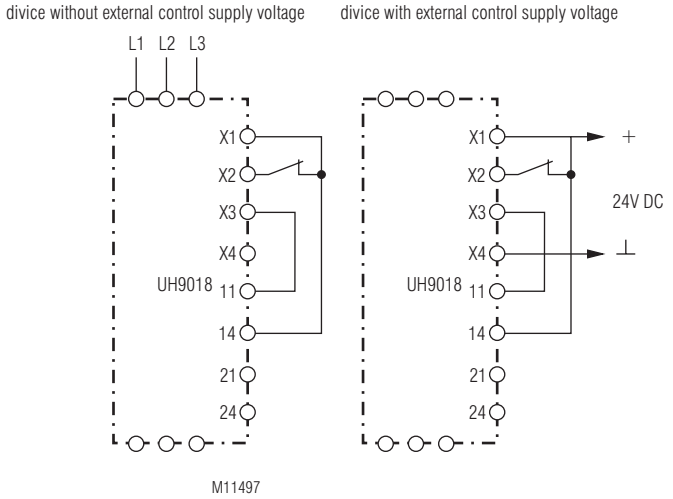

   Then the power supply is turned on. After a short time, the yellow LED starts blinking with different frequency depending on the preset reset mode.

   low flasher frequency: Fault reset by turning on and off of the power supply voltage (standard setting)
   high flasher frequency: Fault reset by restarting

   By opening and closing the start input, the reset mode is changed and the yellow LED starts blinking with the corresponding blinking frequency. The new mode is permanently stored.

Now the power supply can be again turned off and the device is incorporated in the application.

Warning message!

In any case, the cause of the fault must be determined and corrected by trained personnel. Only then the device can be put again into operation.

Monitoring Output

Indicator relay K1 (11, 14): Fault:
Contact are closed

Indicator relay K2 (21, 24): Bypass:
After the end of the start ramp, energizes the bypass relay

Safety Note

- Never clear a fault when the device is switched on.
- **Attention:** This device can be started by potential-free contact or control with DC 10 ... 24 V while connected directly to the mains without contactor (see application example).
  Please note, that even if the motor is at rest, it is not physically separated from the mains. Because of this the motor must be disconnected from the mains via the corresponding manual motor starter.
- The user must ensure that the device and the necessary components are mounted and connected according to the locally applicable regulations and technical standards.
- Adjustments may only be carried out by qualified specialist staff and the applicable safety rules must be observed.

Connection Examples

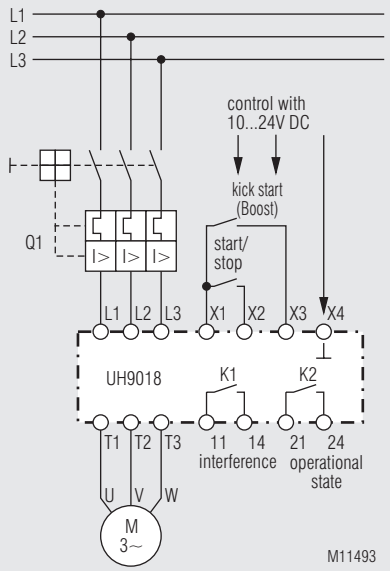

Softstart- and softstop function
(Devices without external control voltage)

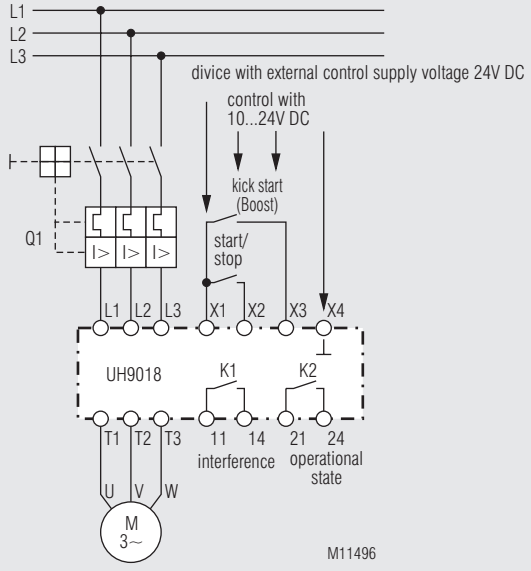

Softstart- and softstop function
(Devices with external control voltage))

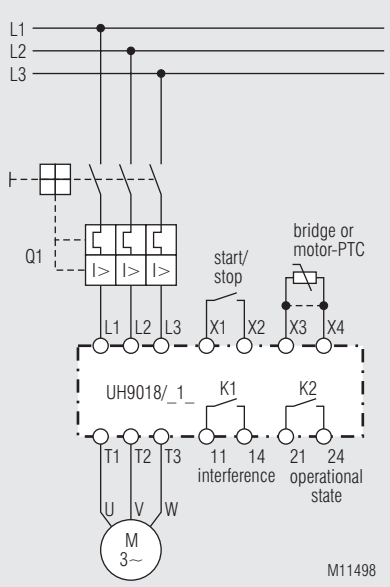

Softstart- and softstop function at UH 9018/_1_