LK1223

Electronic level sensor

LK0472B-B-00KUPKG/US/WHG

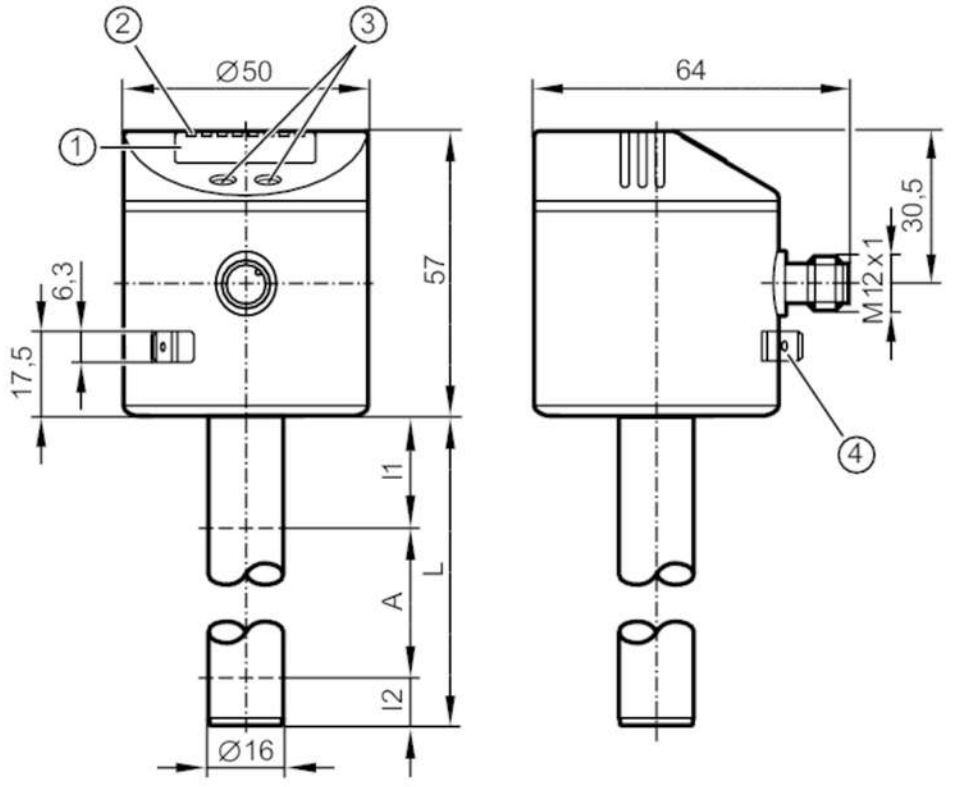

1 alphanumeric display 4-digit
2 status LEDs
3 programming buttons
4 housing connection flat-pin connector 6.3 mm DIN 46244

Product characteristics			
Number of inputs and outputs		Number of digital outputs: 2	
Factory setting		hydrous coolants; water; media similar to water	
Probe length L	[mm]	472	
Application			
Special feature		Gold-plated contacts	
Media		hydrous coolants; oils; oil-based media; water; media similar to water	
Dielectric constant of the medium		> 2	
Cannot be used for		extremely conductive media; adhering media; granulates; bulk material; acids; alkali; hygienic areas and electroplating applications	
Tank pressure		0.5; (unpressurized for applications to WHG (German Federal Water Act)) bar	0.05; (unpressurized for applications to WHG (German Federal Water Act)) MPa
Coolants			
Medium temperature	[°C]	0...35; (with climatic tube E43101: 35...60 °C; not for applications to WHG (German Federal Water Act))	
Oil			
Medium temperature	[°C]	0...70	
Medium temperature short time	[°C]	0...90; (< 1 h)	

LK1223

Electronic level sensor

LK0472B-B-00KUPKG/US/WHG

Maximum speed of the change of level	[mm/s]	200
Water		
Medium temperature	[°C]	0...35; (with climatic tube E43101: 35...60 °C; not for applications to WHG (German Federal Water Act))
Electrical data		
Operating voltage	[V]	12...30 DC
Current consumption	[mA]	< 50
Protection class		III
Reverse polarity protection		yes
Power-on delay time	[s]	< 3
Inputs / outputs		
Number of inputs and outputs		Number of digital outputs: 2
Outputs		
Total number of outputs		2
Output signal		switching signal; IO-Link
Electrical design		PNP/NPN
Number of digital outputs		2
Max. voltage drop switching output DC	[V]	2.5
Permanent current rating of switching output DC	[mA]	200
Short-circuit protection		yes
Type of short-circuit protection		pulsed
Overload protection		yes
Measuring/setting range		
Factory setting		hydrous coolants; water; media similar to water
Probe length L	[mm]	472
Active range A	[mm]	390
Inactive range I1 / I2	[mm]	60 / 22
Setting range		
Set point SP	[mm]	35...390
Reset point rP	[mm]	30...385
In steps of	[mm]	5
Reference point OP	[mm]	139 - 163 - 188 - 212 - 236 - 261 - 285 - 310 - 334 - 358 - 383 - 407 - OFF
Hysteresis, OP	[mm]	3
Accuracy / deviations		
Measuring error [% of the final value]		± 5
Repeatability		± 2
Resolution	[mm]	5
Software / programming		
Parameter setting options		hysteresis / window; normally open / normally closed; switching logic; SP/rP position; adjustment OP; medium selection; offset setting; switch-on/switch-off delay

LK1223

Electronic level sensor

LK0472B-B-00KUPKG/US/WHG

Interfaces			
Communication interface		IO-Link	
Transmission type		COM2 (38,4 kBaud)	
IO-Link revision		1.1	
SDCI standard		IEC 61131-9	
Profiles		Smart Sensor: Process Data Variable; Device Identification, Device Diagnosis	
SIO mode		yes	
Required master port type		A	
Process data analogue		3	
Process data binary		2	
Min. process cycle time	[ms]	3.2	
Supported DeviceIDs		**Type of operation**	**DeviceID**
		default	803
Operating conditions			
Ambient temperature	[°C]	0...60	
Storage temperature	[°C]	-25...80	
Protection		IP 67	
Tests / approvals			
Approval		WHG; General building authority approval; overflow prevention	
EMC		DIN EN 61000-6-2	
		DIN EN 61000-6-4	
Shock resistance		DIN EN 60068-2-27	15 g (11 ms)
Vibration resistance		DIN EN 60068-2-6	5 g (10...2000 Hz)
MTTF	[years]	266	
Mechanical data			
Weight	[g]	399	
Dimensions	[mm]	Ø 16	
Materials		stainless steel (304/1.4301); stainless steel (316L/1.4404); FKM; NBR; PBT; PC; PA; PP; TPV	
Materials (wetted parts)		PP	
Displays / operating elements			
Display		Display unit	2 x LED, green (cm, inch)
		switching status	2 x LED, yellow
		measured values	alphanumeric display, 4-digit
		parameter setting	alphanumeric display, 4-digit
Remarks			
Pack quantity		1 pcs.	

LK1223

Electronic level sensor

LK0472B-B-00KUPKG/US/WHG

Electrical connection

Connector: 1 x M12; coding: A; Contacts: gold-plated

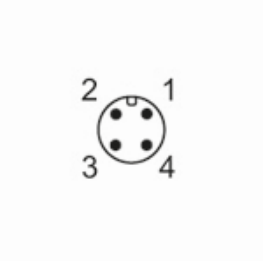

Connection

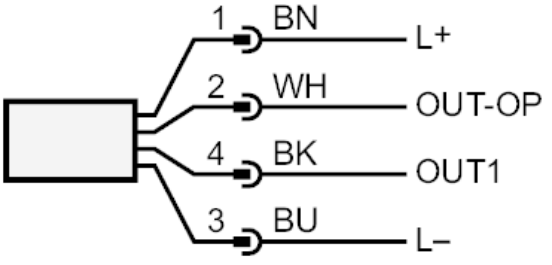

OUT1:	switching output IO-Link
OUT-OP:	switching output overflow prevention to the German Federal Water Act (WHG)
	colours to DIN EN 60947-5-2
	Core colours :
BK =	black
BN =	brown
BU =	blue
WH =	white