# E75005

## AS-Interface flat cable insulation displacement connector

FC Quick Connect M12

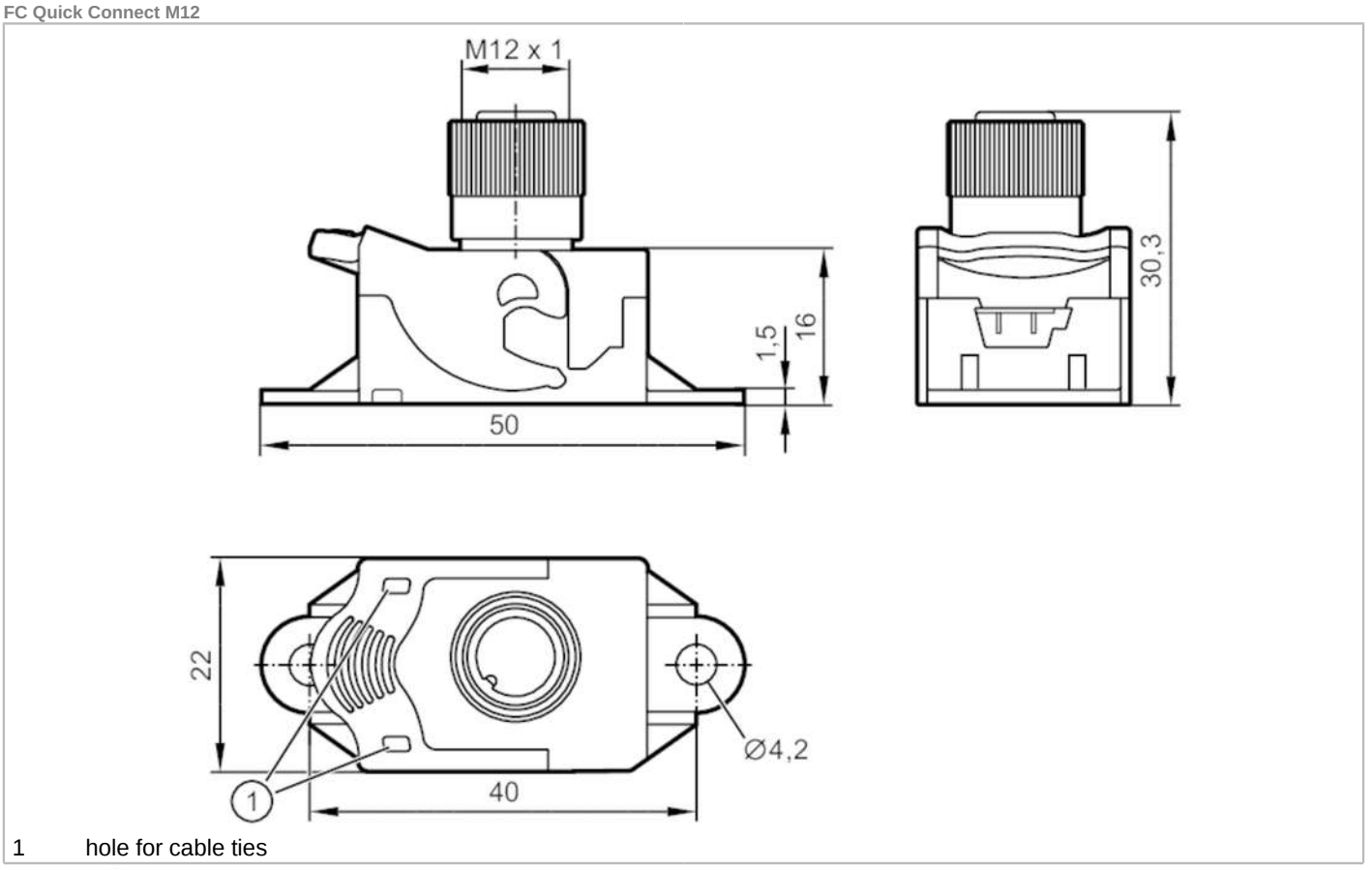


1 hole for cable ties

| | | | |
|---|---|---|---|
| **Electrical data** | | | |
| Operating voltage | [V] | < 42 DC | |
| Protection class | | III | |
| Max. current load total | [A] | 4 | |
| **Operating conditions** | | | |
| Ambient temperature | [°C] | -25...70 | |
| Storage temperature | [°C] | -25...75 | |
| Protection | | IP 67 | |
| **Tests / approvals** | | | |
| UL approval | | power supply | Class 2 |
| **Mechanical data** | | | |
| Weight | [g] | 17.7 | |
| Materials | | housing: PA; O-ring: FKM; Lock nut: brass nickel-plated; contact pins: bronze tin-plated | |
| **Remarks** | | | |
| Remarks | | The flat cable must not end in the device. | |
| Pack quantity | | 1 pcs. | |

# E75005

## AS-Interface flat cable insulation displacement connector

FC Quick Connect M12

### Electrical connection

Connector:  M12; coding: A; Tightening torque: 0.4...0.6 Nm

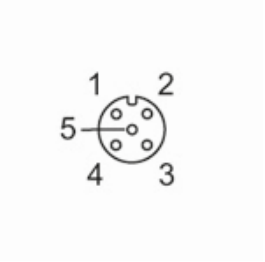


| | |
|---|---|
| | when connected to yellow AS-i flat cable |
| 1 | AS-i + |
| 2 | n.c. |
| 3 | AS-i - |
| 4 | n.c. |
| 5 | n.c. |
| | when connected to black flat cable |
| 1 | AUX + |
| 2 | n.c. |
| 3 | AUX - |
| 4 | n.c. |
| 5 | n.c. |