Enclosed Switches **IP65 Steel Enclosure**

Enclosed OT Load break Switches
Enclosed OS Switch Fuses
Installation Instructions

1TVS013132P0300 30/03/11 – R1

- This unit should be mounted vertically
- Lids can be removed to ease installation. Lift lid vertically off hinge pins. Ensure lid is replaced correctly.
- This product will only be IP65 when all holes are adequately sealed.
- Use supplied washers to maintain IP rating. Position to rear of enclosure prior to fixing to surface. (see figure 1) Use all four washers.
- It is important that regular checks are made to all seals and gaskets to prevent water ingress.
- Ensure all entry plate and lid fixing screws are tight.

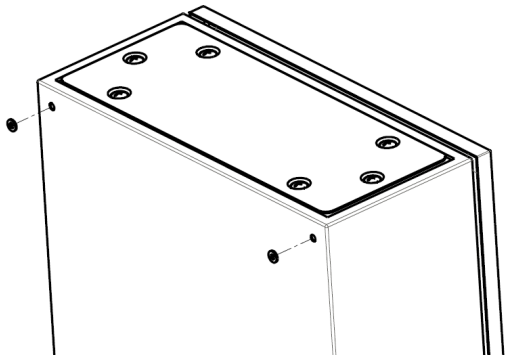

Figure 1

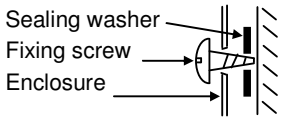

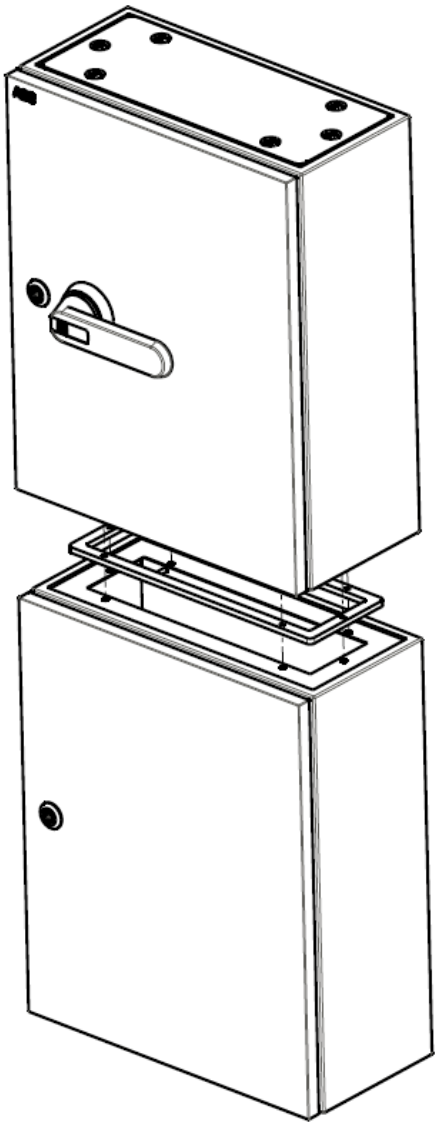

Figure 2

Fitment of spreader boxes

- Remove bottom entry plate from switch enclosure and reposition to the bottom of spreader box.
- Ensure all entry plate fixing screws and washers are replaced.
- Attach supplied Mating gasket direct to top surface of spreader box. (see figure 2)
- Remove lid and use supplied screws to connect the switch enclosure to spreader box. Tighten screws until mating gasket is compressed at least 50% of its thickness.

Neutral terminals

- All switch fuses are supplied with a removable link. Ensure that the tightness of neutral link fixings is checked after installation and at regular intervals.

IMPORTANT: Interlock defeat
Please note the door interlock is intended to stop you opening the door with the handle in the “on” position. Even with the handle in the “off” position you may experience some difficulty opening the door and where this happens simply press a thin object into the hole found on the handles collar between the two letter “O’s” (figure 3) whilst gently easing the door open.
Safety note: You must disconnect incoming power before attempting this.

Note: Spreader enclosures only required for OT and OS 160A and above see sheet 2 for details.

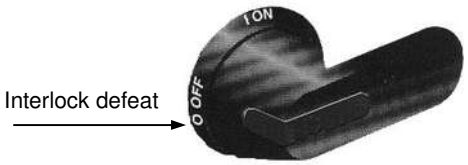

Figure 3

For further information please contact your ABB Technical Helpline 02476 368500

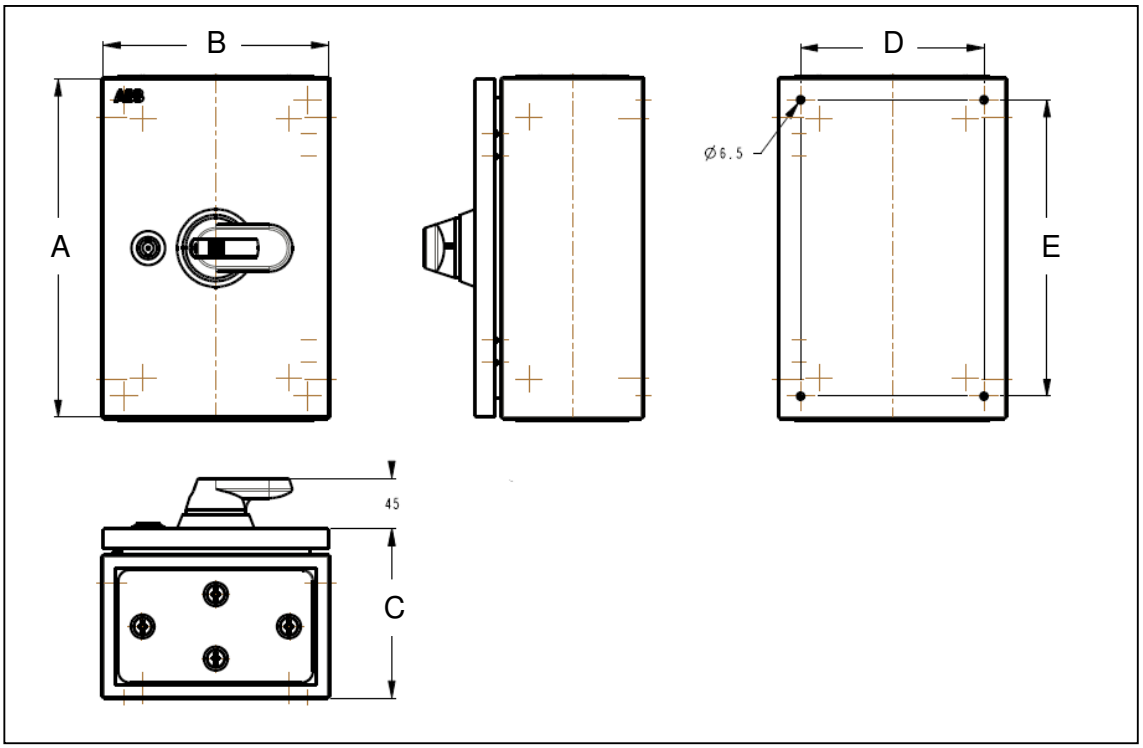

	Gasket	Spreader Enc.	Dimensions				
			A	B	C	D	E
OT20TPN-B	N/A	N/A	300	200	150	163	263
OT20FP-B	N/A	N/A					
OT32TPN-B	N/A	N/A					
OT32FP-B	N/A	N/A					
OT63TPN-B	N/A	N/A	300	300	150	263	263
OT63FP-B	N/A	N/A					
OT100TPN-B	N/A	N/A	400	300	150	263	363
OT100FP-B	N/A	N/A					
OT125TPN-B	N/A	N/A					
OT125FP-B	N/A	N/A					
OT160TPN-B	GZ4025	SRN5425K	500	400	250	363	463
OT160FP-B	GZ4025	SRN5425K					
OT200TPN-B	GZ4020	SRN5420K	500	400	200	363	463
OT200FP-B	GZ4020	SRN5420K					
OT315TPN-B	GZ4020	SRN5420K					
OT315FP-B	GZ4020	SRN5420K					
OT400TPN-B	GZ4020	SRN5420K					
OT400FP-B	GZ4020	SRN5420K					
OS20TPN-B	N/A	N/A	300	300	150	263	263
OS20FP-B	N/A	N/A					
OS32TPN-B	N/A	N/A					
OS32FP-B	N/A	N/A					
OS63TPN-B	N/A	N/A	400	300	150	263	363
OS63FP-B	N/A	N/A					
OS100TPN-B	N/A	N/A					
OS100FP-B	N/A	N/A					
OS125TPN-B	N/A	N/A					
OS125FP-B	N/A	N/A					
OS160TPN-B	GZ4025	SRN5425K	500	400	250	363	463
OS160FP-B	GZ4025	SRN5425K					
OS200TPN-B	GZ4025	SRN6425K	600	400	250	363	563
OS200FP-B	GZ4025	SRN6425K					
OS315TPN-B	GZ4025	SRN6425K					
OS315FP-B	GZ4025	SRN6425K					
OS400TPN-B	GZ4025	SRN6425K					
OS400FP-B	GZ4025	SRN6425K					

Council of European Communities Directives: The products in this publication conform to relevant EEC Directives and EN Standards. Installation and use of such products must be carried out by competent, properly trained personnel, complying with any instructions supplied by ABB. Liability for improper incorporation, assembly, use, processing, storing or handling of goods remains the sole responsibility of the individual, or company carrying out such work. This publication is for information only. Whilst every care has been taken in the preparation of this leaflet, no liability is accepted for any consequence of its use. No licence to use any patent should be assumed. All dimensions are approximate only and subject to change without notice, as are other technical features resulting from continual development and improvement.