NU 1006

Popular item

Dimensions

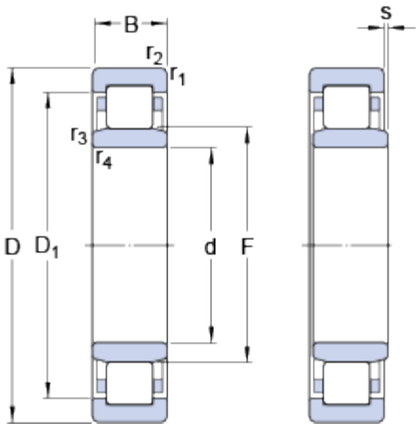

d		30	mm
D		55	mm
B		13	mm
D_1	≈	45.56	mm
F		36.5	mm
$r_{1,2}$	min.	1	mm
$r_{3,4}$	min.	0.6	mm
s	max.	1.6	mm

Abutment dimensions

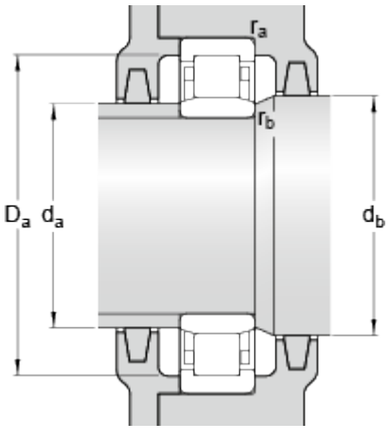

d_a	min.	32.9	mm
d_a	max.	35.6	mm
d_b	min.	38	mm
D_a	max.	49.8	mm
r_a	max.	1	mm
r_b	max.	0.6	mm

Calculation data

Basic dynamic load rating	C	17.9	kN
Basic static load rating	C_0	17.3	kN
Fatigue load limit	P_u	1.86	kN
Reference speed		15000	r/min
Limiting speed		15000	r/min
Calculation factor	k_r	0.1	
Limiting value	e	0.2	
Axial load factor	Y	0.6	

Mass

Mass bearing	0.11	kg