Photoelectric Sensors

BOS R090K-PU-RH10-S75
Order Code: BOS029M

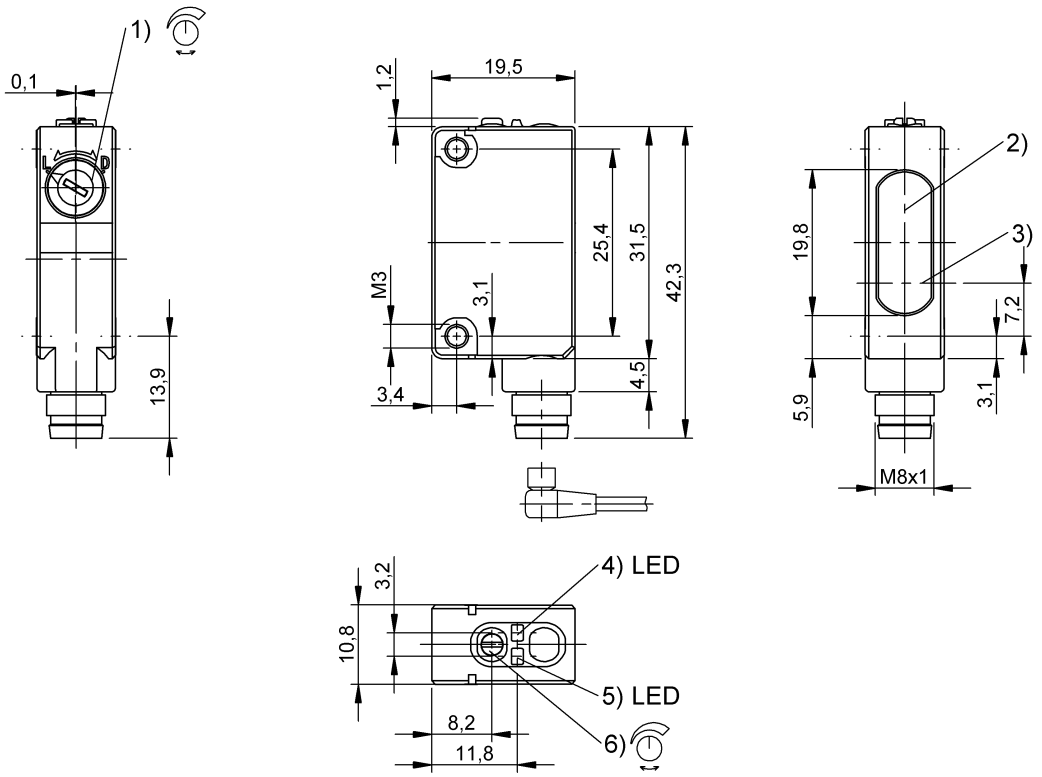

1) Mode settings, 2) Optical axis receiver, 3) Optical axis emitter, 4) Power indicator, 5) stability, 6) Sn

Basic features

Approval/Conformity	cULus CE UKCA EAC WEEE
Principle of operation	Photoelectric sensor
Series	R090K
Style	Square Connection 90°

Display/Operation

Adjuster	6-turn potentiometer Rotary switch 2 positions
Display	Output function- LED yellow Stability - LED green
Setting	Rated switching distance (Sn) Light-on/dark-on

Electrical connection

Connection	Connector, M8x1, 4-pin
Polarity reversal protected	yes
Short-circuit protection	yes

Electrical data

No-load current Io max. at Ue	20 mA
Operating voltage Ub	10...30 VDC
Rated operating current Ie	100 mA
Rated operating voltage Ue DC	24 V
Ready delay tv max.	300 ms
Ripple max. (% of Ue)	10 %
Switching frequency	1000 Hz
Turn-off delay toff max.	0.5 ms
Turn-on delay ton max.	0.5 ms
Voltage drop Ud max. at Ie	2 V

Environmental conditions

Ambient temperature	-35...55 °C
IP rating	IP67

Photoelectric Sensors

BOS R090K-PU-RH10-S75
Order Code: BOS029M

Functional safety

MTTF (40 °C)	92 a

Interface

Switching output	PNP normally open/normally closed (NO/NC)

Material

Housing material	PC PBT
Material sensing surface	PMMA

Mechanical data

Dimension	10.7 x 43.5 x 19.5 mm
Mounting part	Screw M3
Tightening torque max.	0.5 Nm

Optical features

Ambient light max.	10000 Lux
Beam characteristic	Focus, typical at 90 mm
Light spot size	Ø 4.5 mm at 60 mm
Light type	LED, red light
Principle of optical operation	Diffuse sensor, triangulation
Special optical feature	Background suppression
Switching function, optical	dark-on/light-on
Wave length	660 nm

Range/Distance

Range	20...350 mm
Rated operating distance Sn	350 mm Adjustable

Connector Drawings



Wiring Diagrams

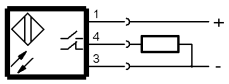

Opto Symbols

