Model Number

NCN50-FP-W-P1

Features

- **Comfort series**
- **50 mm not embeddable**

Connection

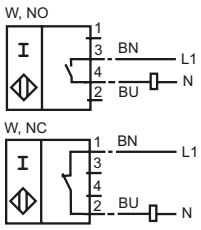

Dimensions

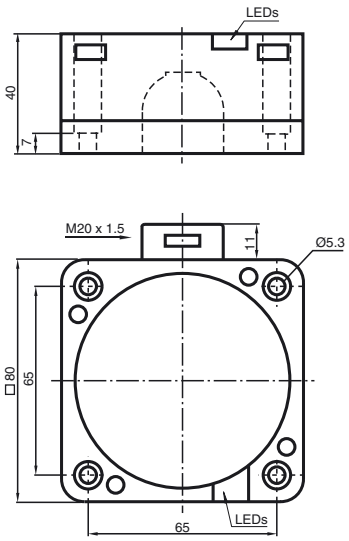

Technical Data

General specifications		
Switching element function		ACMake/Break function
Rated operating distance	s_n	50 mm
Installation		not embeddable
Output polarity		AC
Assured operating distance	s_a	0 ... 40.5 mm
Reduction factor r_{Al}		0.4
Reduction factor r_{Cu}		0.3
Reduction factor r_{V2A}		0.85
Nominal ratings		
Operating voltage	U_B	20 ... 253 V
Switching frequency	f	0 ... 20 Hz
Hysteresis	H	typ. 3 %
Short-circuit protection		no
Voltage drop	U_d	≤ 5 V typ. 4V
Momentary current (20 ms, 0.1 Hz)		≤ 4000 mA
Operating current	I_L	5 ... 500 mA
Off-state current	I_r	0.3 ... 1 mA typ. 0.7 mA
Operating voltage display		LED, green
Indication of the switching state		LED, yellow
Ambient conditions		
Ambient temperature		-25 ... 70 °C (248 ... 343 K)
Mechanical specifications		
Connection type		terminal compartment
Core cross-section		up to 2.5 mm^2
Housing material		PBT
Sensing face		PBT
Protection degree		IP68
Note		1) In the temperature range below 0 °C, permissible operating voltage U_b 80...253 V Safety fuse ≤ 2 A (quick-blow) according to IEC 60127-2 Sheet 1 Recommendation: after a short circuit, check that the device is functioning correctly.
Compliance with standards and directives		
Standard conformity		
Standards		EN 60947-5-2:2007 IEC 60947-5-2:2007

Release date: 2009-12-09 07:52 Date of issue: 2009-12-09 130546_ENG.xml