E21217

Mounting set for photoelectric sensors

O4 MOUNTING BRACKET 200

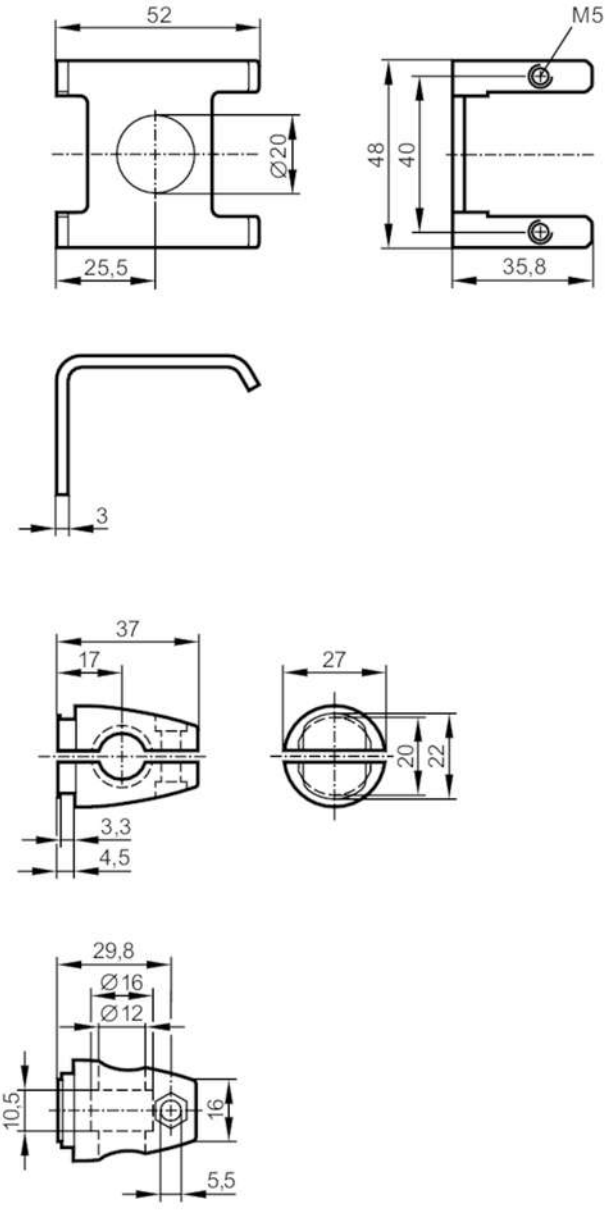

Application		
Design		clamp mounting
Mechanical data		
Weight	[g]	131
Type of mounting		Mounting rod; (Ø 12 mm)
Materials		stainless steel (1.4404 / 316L); Clamp: diecast zinc
Accessories		
Items supplied		cylinder screws: 2 x M5 x 10
		nut: 1 x M5
		head cap screw: 1 x M5 x 16
Remarks		
Pack quantity		1 pcs.