Klöckner MOELLER

Montageanweisung
Installation Instructions
Notice d'installation
Istruzioni per il montaggio
Instrucciones de montaje

Energy Control

12/95 AWA 121-1484

SVB-PKZ0 (-CI) (-E)

12/95 AWA 121-1484

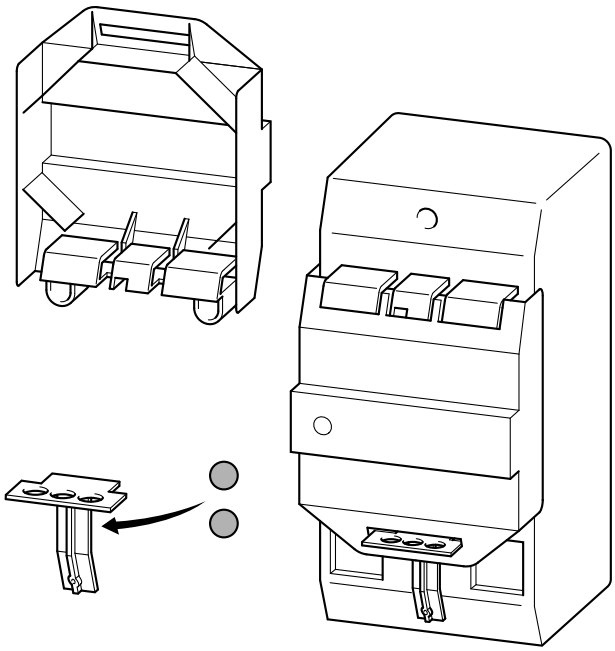

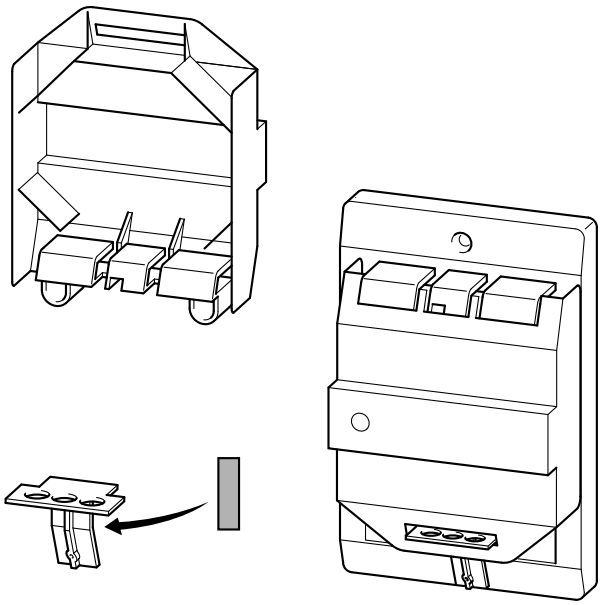

-CI

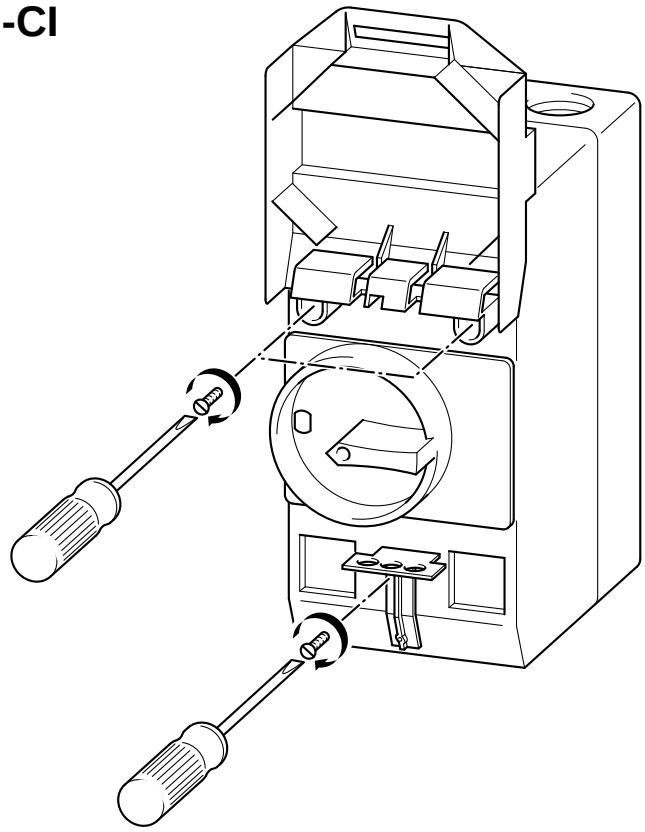

i → AWA 121-1326

-E

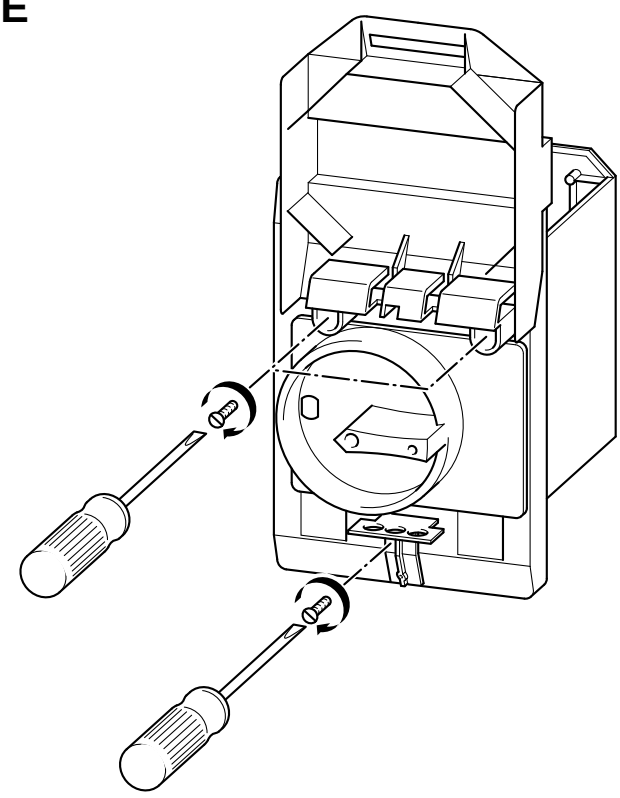

i → AWA 121-1327

Klöckner-Moeller GmbH, 53105 Bonn

Änderungen vorbehalten

12/95 AWA 121-1484 **Formel D** /
Printed in the Federal Republic of Germany