E20822

Fibre optic diffuse reflection sensor

FT-50-V-V-M5/16

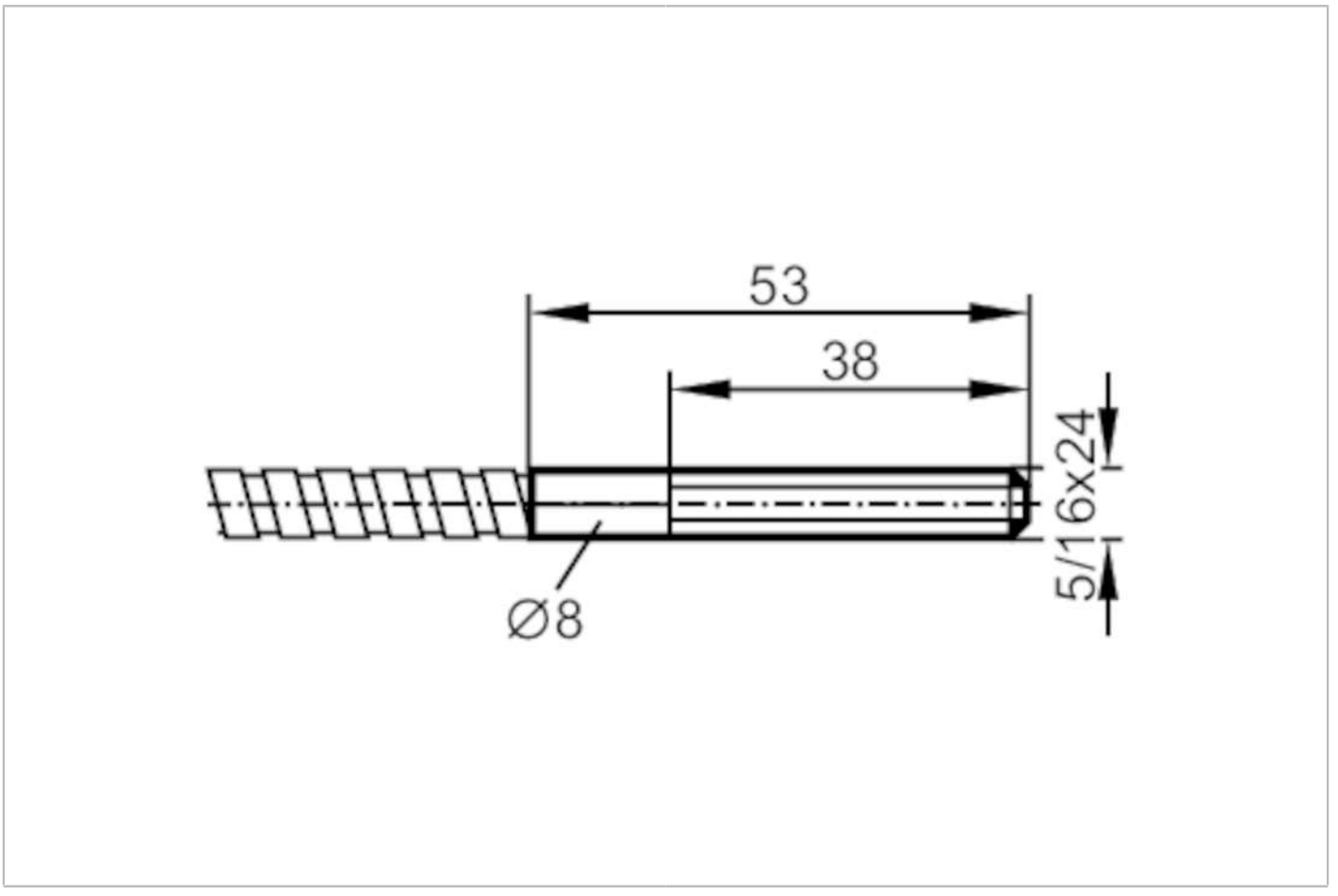

Application		
Function principle		Diffuse reflection sensor
Detection zone		
Range with fibre optic amplifier type		OBF; ODF; OMF
OBF		
Range fibre optics	[mm]	150
ODF		
Range fibre optics	[mm]	1
OMF		
Range fibre optics	[mm]	175
Operating conditions		
Ambient temperature	[°C]	-58...315
Mechanical data		
Weight	[g]	126.5
Version of sensing head		straight
Total length	[mm]	900
Min. bending radius	[mm]	19
Fibre arrangement		◐
Fibre material		glass

E20822

Fibre optic diffuse reflection sensor

FT-50-V-V-M5/16

Fibre head material	stainless steel (1.4305 / 303)
Fibre sheath material	stainless steel (1.4305 / 303)

Accessories

Items supplied	hexagon nuts: 2
	clamping rings: 2
	O-rings: 2

Remarks

Pack quantity	1 pcs.