RER 190-39/14/2TDMO

DC centrifugal fan



ebm-papst St. Georgen GmbH & Co. KG
Hermann-Papst-Str. 1
D-78112 St. Georgen
Phone +49 (0) 7724 81-0
Fax +49 (0) 7724 81-1309
info2@de.ebmpapst.com
www.ebmpapst.com

Nominal data

Type	RER 190-39/14/2TDMO	
Nominal voltage	VDC	24
Nominal voltage range	VDC	16 .. 36
Speed (rpm)	min^{-1}	3900
Power consumption	W	110
Min. ambient temperature	°C	-20
Max. ambient temperature	°C	65
Air flow	m^3/h	860
Sound power level	B	7.9

ml = Max. load · me = Max. efficiency · fa = Free air · cs = Customer specification · ce = Customer equipment
Subject to change

Technical description

General description	3-phase fan drive with very smooth operation and high efficiency Backward-curved RadiCal impeller
Impeller material	Glass-fiber reinforced plastic
Weight	0.87 kg
Dimensions	Ø 190 x 69 mm
Airflow direction	Axial: intake, radial: discharge
Direction of rotation	Clockwise, viewed toward rotor
Storage	Ball bearing
Service life L10 at 40 °C	52500 h
Service life L10 at maximum temperature	30000 h
Cable	With leads AWG 18, 20 or AWG 22, TR 64, speed signal and control input AWG 22

ebm-papst St. Georgen GmbH & Co. KG · Hermann-Papst-Str. 1 · D-78112 St. Georgen · Phone +49 (0) 7724 81-0 · Fax +49 (0) 7724 81-1309 · info2@de.ebmpapst.com · www.ebmpapst.com

DC centrifugal fan

Product drawing

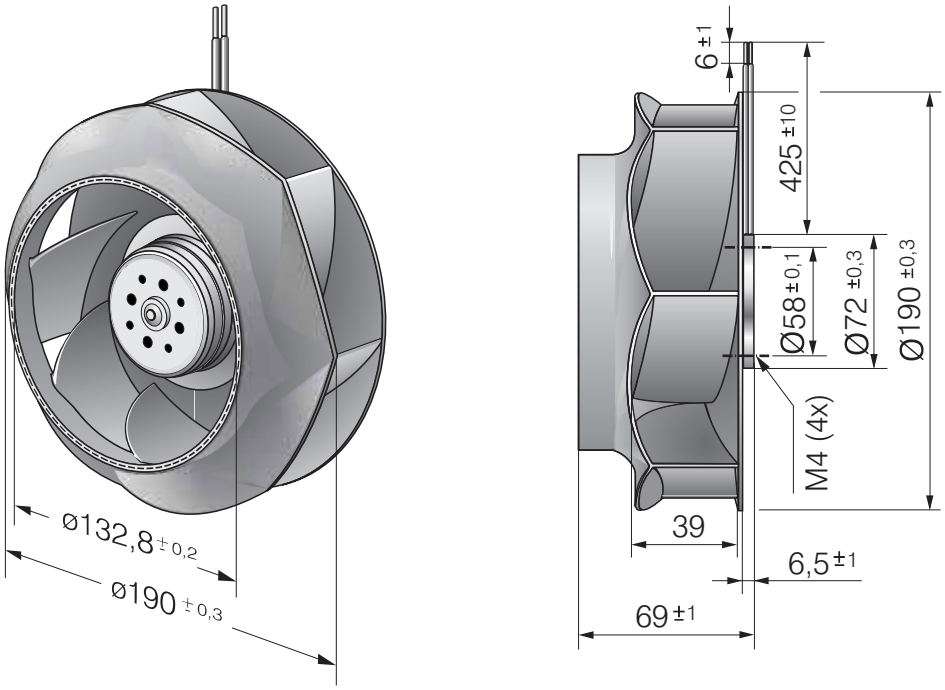

ebm-papst St. Georgen GmbH & Co. KG · Hermann-Papst-Str. 1 · D-78112 St. Georgen · Phone +49 (0) 7724 81-0 · Fax +49 (0) 7724 81-1309 · info2@de.ebmpapst.com · www.ebmpapst.com

DC centrifugal fan

Curves

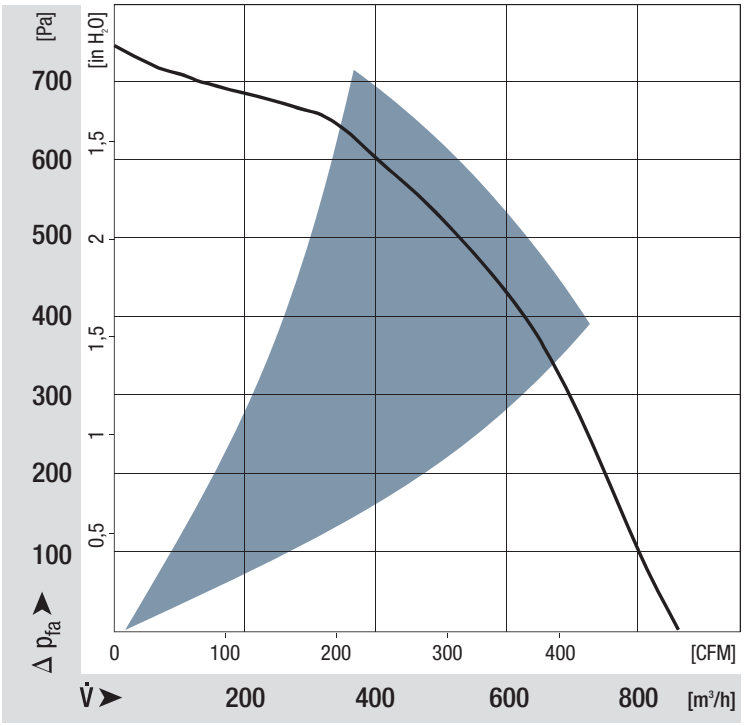

ebm-papst St. Georgen GmbH & Co. KG · Hermann-Papst-Str. 1 · D-78112 St. Georgen · Phone +49 (0) 7724 81-0 · Fax +49 (0) 7724 81-1309 · info2@de.ebmpapst.com · www.ebmpapst.com