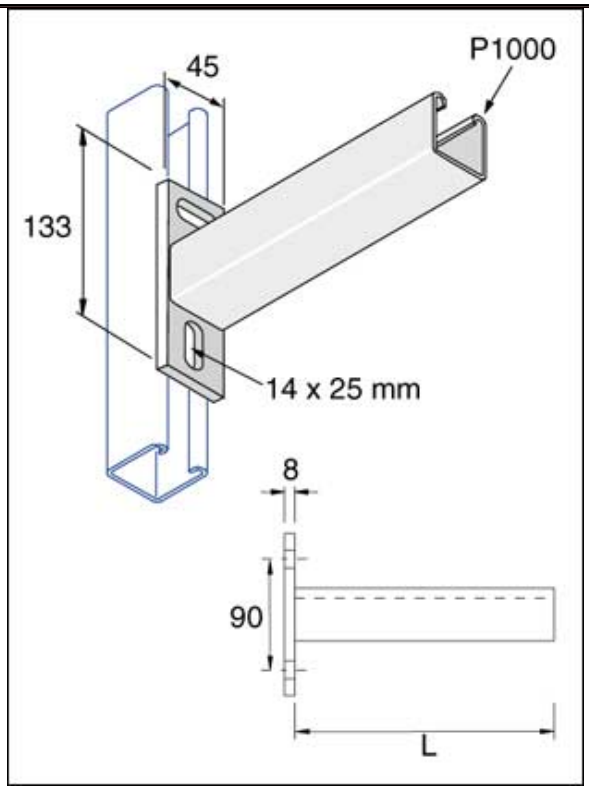

Load Data (All Loads are kN)					
Part Number	L	F1 1/2 L 1/2 L L	F1 L	F2 1/3L F2 1/3L 1/3L L	F3 1/4L F3 1/4L F3 1/4L 1/4L L
P2663/150	150	6.2	3.1	3.1	2.06
P2663/300	300	3.2	1.6	1.6	1.06
P2663/450	450	2.15	1.07	1.07	0.71
P2663/600	600	1.62	0.81	0.81	0.54
P2663/750	750	1.3	0.65	0.65	0.43

Part No.	Finish	Size	Length	Weight
P2663/150	HG	41mm	150mm	0.80
P2663/300	HG	41mm	300mm	1.17
P2663/450	HG	41mm	450	1.59
P2663/600	HG	41mm	600	2.03
P2663/750	HG	41mm	750	2.53
P2663/150	SS	41mm	150mm	0.81
P2663/300	SS	41mm	300mm	1.20
P2663/450	SS	41mm	450	1.62
P2663/600	SS	41mm	600	2.08
P2663/750	SS	41mm	750	2.62

Project: A

Architect / Engineer: B

Date: C **Phone:** D

Contractor: E

Address: F

Notes 1: G

Approval Stamp: