Product datasheet

Specifications



photo-electric sensor - XUJ - diffuse - analog - Sn 0.8m - 12..24VDC - terminals

XUJK803538

Main

Range of product	Telemecanique Photoelectric sensors XU
Series name	Application material handling
Electronic sensor type	Photo-electric sensor
Sensor name	XUJ
Sensor design	Compact
Detection system	Diffuse
Material	Plastic
Line of sight type	Axial
Type of output signal	Analogue
Supply circuit type	DC
Wiring technique	3-wire
Discrete output type	PNP
Analogue output range	4...20 mA
Electrical connection	Screw-clamp terminals, 1 x 2.5...2 x 1.5 mm²
Product specific application	-
Emission	Infrared diffuse
[Sn] nominal sensing distance	0.2…0.8 m diffuse

Complementary

Enclosure material	PEI
Maximum sensing distance	0.8 m
Output type	Solid state
Add on output	With analogue output
Wire insulation material	PVC
Status LED	1 LED (yellow) for output state
[Us] rated supply voltage	12...24 V DC
Supply voltage limits	20…30 V DC
Output voltage	0...10 V DC
Switching capacity in mA	<= 100 mA (overload and short-circuit protection)

Disclaimer: This documentation is not intended as a substitute for and is not to be used for determining suitability or reliability of these products for specific user applications

Switching frequency	<= 250 Hz
Maximum voltage drop	<1.5 V (closed state)
Current consumption	<= 35 mA no-load
Maximum delay first up	15 ms
Maximum delay response	2 ms
Maximum delay recovery	2 ms
Setting-up	Without sensitivity adjustment
Depth	50 mm
Height	50 mm
Width	18 mm
Net weight	0.07 kg

Environment

Product certifications	CE UL CSA
Ambient air temperature for operation	-25…55 °C
Ambient air temperature for storage	-40…70 °C
Vibration resistance	7 gn, amplitude = +/- 1.5 mm (f = 10…55 Hz) conforming to IEC 60068-2-6
Shock resistance	30 gn (duration = 11 ms) conforming to IEC 60068-2-27
IP degree of protection	IP65 double insulation conforming to IEC 60529

Packing Units

Unit Type of Package 1	PCE
Number of Units in Package 1	1
Package 1 Weight	214.0 g
Package 1 Height	4.7 cm
Package 1 width	11.1 cm
Package 1 Length	16.5 cm
Unit Type of Package 2	S02
Number of Units in Package 2	12
Package 2 Weight	2.89 kg
Package 2 Height	15 cm
Package 2 width	30 cm
Package 2 Length	40 cm

Offer Sustainability

REACh Regulation	REACh Declaration
EU RoHS Directive	Pro-active compliance (Product out of EU RoHS legal scope) EU RoHS Declaration
Mercury free	Yes
RoHS exemption information	Yes

Contractual warranty

Warranty	18 months

Product datasheet XUJK803538

Dimensions Drawings

Dimensions

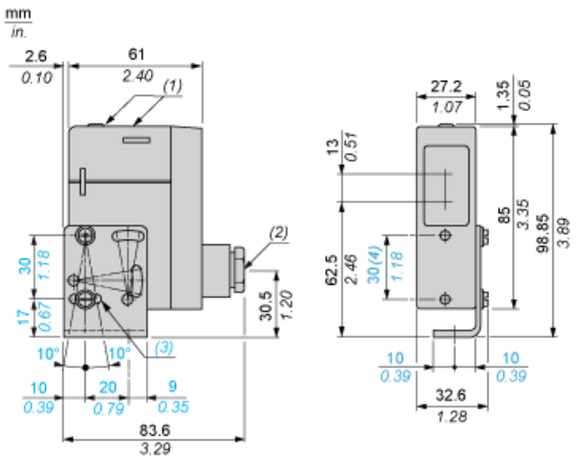

(1) LED
(2) 11P cable gland
(3) 1 elongated hole Ø 4.2 x 14
(4) Front fixing (Ø 4 screws and inserts included)

Product datasheet XUJK803538

Connections and Schema

Wiring Schemes

Diffuse System

Current Output

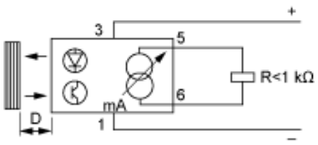

1 : (-)
3 : (+)
5 : Output current
6 : (-)

Voltage Output

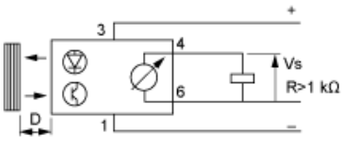

1 : (-)
3 : (+)
4 : Output voltage
6 : (-)

Curves

Output Signal (Related to Distance of Object). Test Performed with 20 x 20 cm, White 90% Object

Output Current

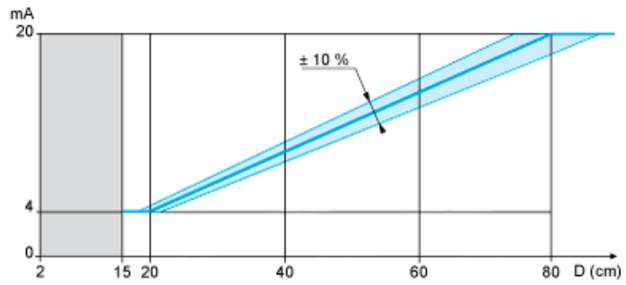

Output Voltage

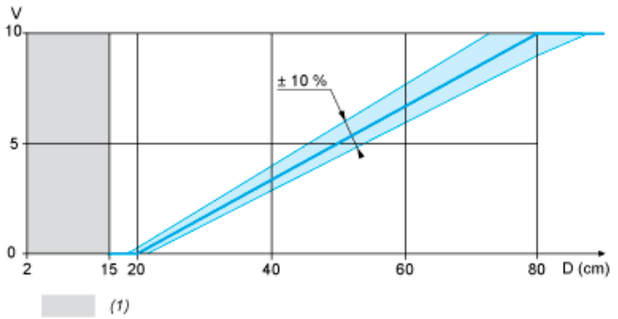

(1) Forbidden zone