Your Expert Partner for **Human Machine Interfaces**

Protection cover

Distribution by
Rs-online

704.925.0

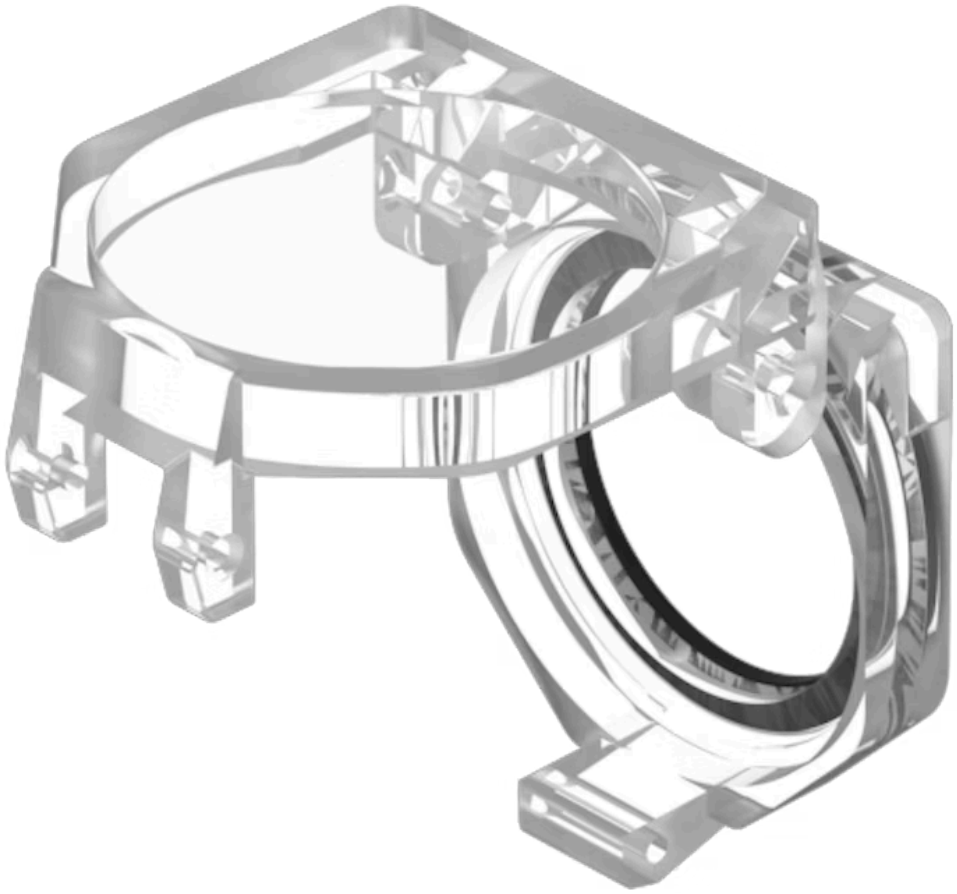

https://rs-online.eao.com/component/704.925.0...

Your product:



704.925.0
Protection cover

MECHANICAL CHARACTERISTICS

Weight: 0.007 kg

OTHER

Short Description: Protection cover, Plastic, transparent

Titel Accessory: Protection cover

Material: Plastic

Product attributes: For push button

Hints: Hinged, with means for sealing

Optics: transparent

Dimension drawings:

