I12001

Inductive area sensor

SIT-2070-ABOW

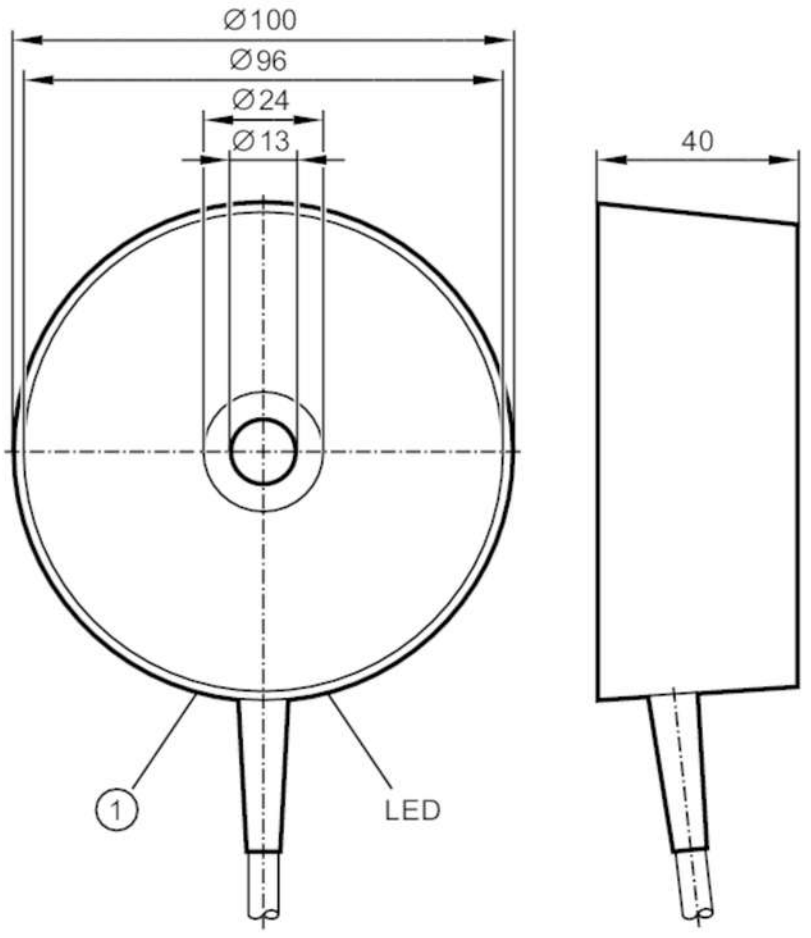

1 potentiometer

Product characteristics		
Output function		normally open
Sensing range	[mm]	20...70
Housing		cylindrical
Dimensions	[mm]	Ø 100 / L = 40
Electrical data		
Frequency AC	[Hz]	47...63
Operating voltage	[V]	90...250 AC
Protection class		II
Reverse polarity protection		no
Outputs		
Output function		normally open
Max. voltage drop switching output AC	[V]	11
Minimum load current	[mA]	15
Max. leakage current	[mA]	6

I12001

Inductive area sensor

SIT-2070-ABOW

Permanent current rating of switching output AC	[mA]	200; (250 (...50 °C))	
Short-time current rating of switching output	[mA]	1500; (10 ms / 0,5 Hz)	
Switching frequency AC	[Hz]	5	
Short-circuit proof		no	
Overload protection		no	
Detection zone			
Sensing range	[mm]	20...70	
Sensing range adjustable		yes	
Factory setting sensing range	[mm]	70	
Real sensing range Sr	[mm]	70 ± 10 %	
Accuracy / deviations			
Correction factor		steel: 1 / stainless steel: 0.7 / brass: 0.4 / aluminium: 0.3 / copper: 0.2	
Hysteresis	[% of Sr]	< 15	
Switch point drift	[% of Sr]	-15...15	
Operating conditions			
Ambient temperature	[°C]	-20...70	
Protection		IP 65	
Tests / approvals			
EMC		EN 60947-5-2	
		EN 55011	class B
Mechanical data			
Weight	[g]	509.5	
Housing		cylindrical	
Mounting		non-flush mountable	
Dimensions	[mm]	Ø 100 / L = 40	
Materials		PBT	
Displays / operating elements			
Display		switching status	1 x LED, yellow
Electrical connection			
Required protection		miniature fuse to IEC60127-2 sheet 1; ≤ 2 A; fast acting	
Accessories			
Items supplied		screws: 1	
Remarks			
Remarks		Recommendation: Check the safe functioning of the unit after a short circuit.	
Pack quantity		1 pcs.	

I12001

Inductive area sensor

SIT-2070-ABOW

Electrical connection

Cable: 2 m, PVC; 2 x 0.5 mm²

Connection

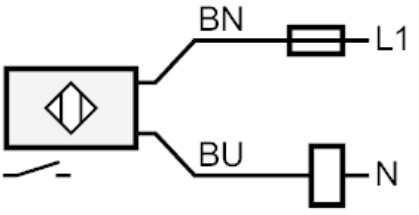

Note miniature fuse to IEC60127-2 sheet 1 ≤ 2 A fast acting
Core colours :

BN =	brown
BU =	blue