

Image may differ from product. See technical specification for details.

FRB 14/215

Locating (stabilizing) ring

A bearing in the locating position must be secured axially in the housing. If the bearing seat in the housing and the bearing width do not match, locating (stabilizing) rings are required. Typically, two locating rings are required per housing. One ring should be placed on each side of the bearing. If only one locating ring is required, it should be installed on the same side as the lock nut.

Overview

Dimensions

Outside diameter	215 mm
Inside diameter	202 mm
Width	14 mm

Properties

Accessory type	Locating ring

Logistics

Product net weight	0.29 kg
eClass code	23-05-17-90
UNSPSC code	31171519

Technical specification

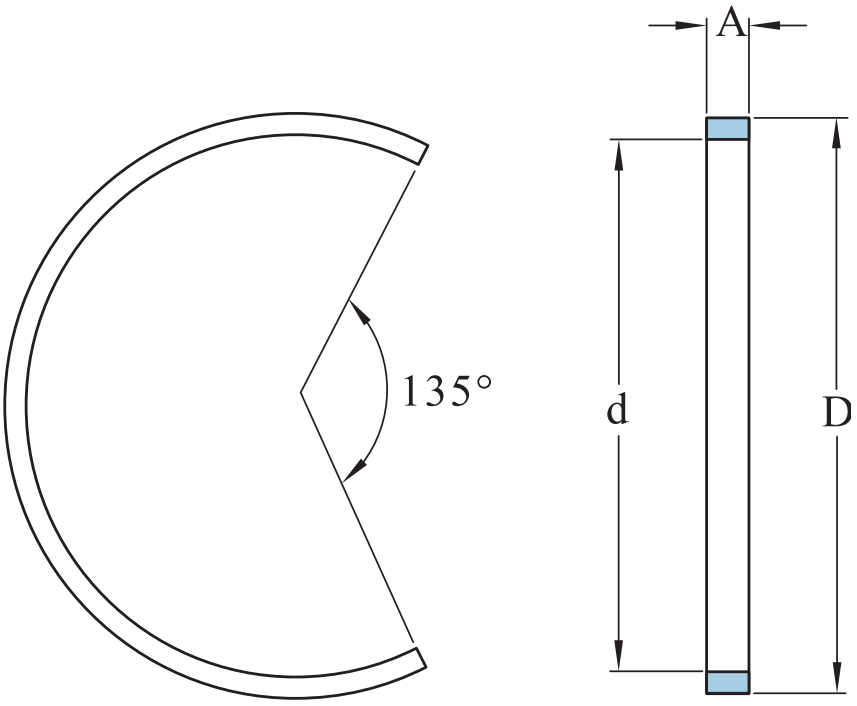

Dimensions

D	215 mm	Outside diameter
d	202 mm	Inside diameter
A	14 mm	Width

Terms of use