Fastening Technology

BMS CU-M-D12-E038-02
Order Code: BAM03EW

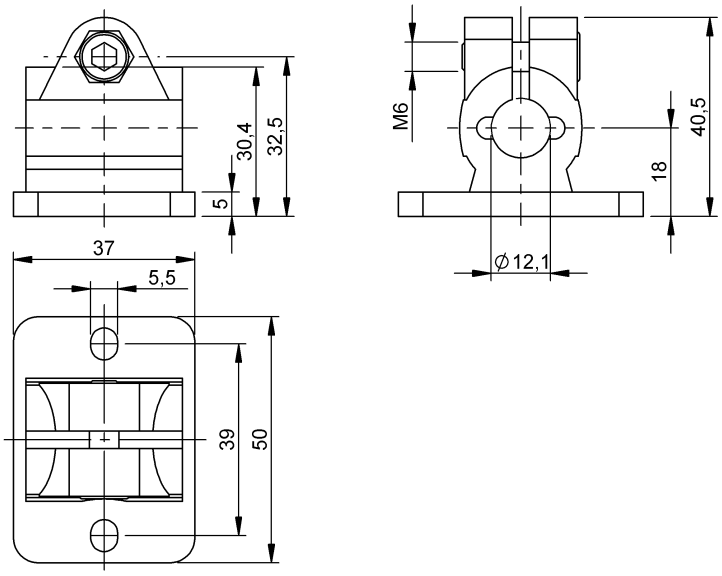

Basic features

Approval/Conformity	Ecolab
Principle of operation	Mounting system
Scope of delivery	Base holder
Style	Base holder
Use	for holding rods with Ø12 mm for monitor holder BMS for mounting system BMS

Material

Material	Stainless steel

Mechanical data

Dimension	37 x 40.5 x 50 mm
Mounting part	Threads Clamps
Tightening torque clamping screw	10 Nm