EBC049

Splitter box

ZDO4F035MSS0010H10

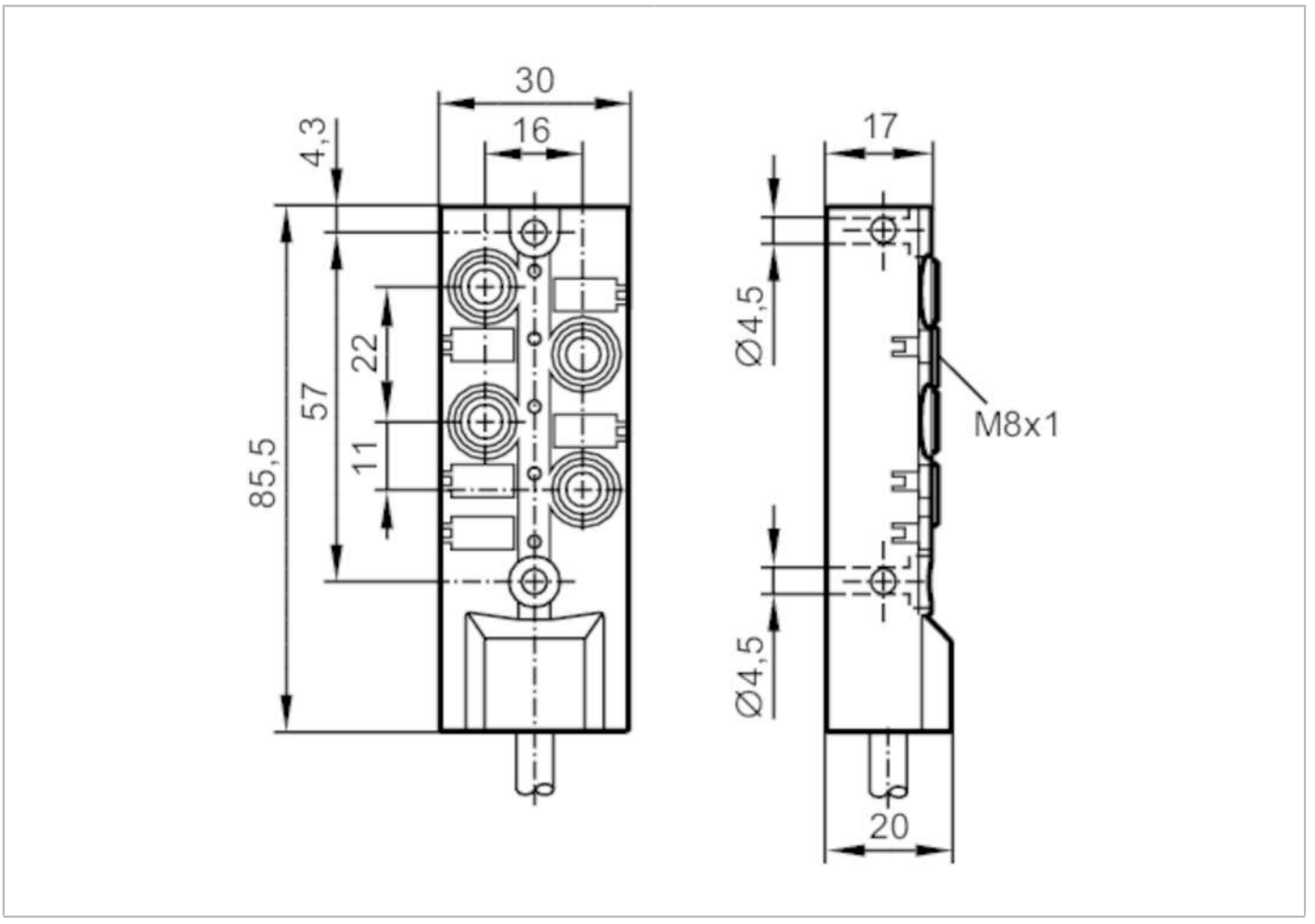

Application		
Special feature		Halogen-free; Gold-plated contacts; Drag chain suitability
Electrical data		
Operating voltage	[V]	10...30 DC; ("supply class 2" to cULus)
Protection class		III
Max. current load per module/slot	[A]	2
Max. current load total	[A]	6
Outputs		
Electrical design		PNP
Operating conditions		
Ambient temperature	[°C]	-25...80
Ambient temperature (moving)	[°C]	-5...60
Protection		IP 65; IP 67; IP 68
Mechanical data		
Weight	[g]	650
Materials		PBT-GF20; brass nickel-plated

EBC049

Splitter box

ZDO4F035MSS0010H10

Moulded-body material	PBT-GF 20 / brass, nickel-plated	
Number of ports splitter box	4	
Connector type	M8	
Drag chain suitability	yes	
Drag chain suitability	bending radius for flexible use	min. 10 x cable diameter
	travel speed	max. 3.3 m/s for a horizontal travel length of 5 m and max. acceleration of 5 m/s²
	bending cycles	> 5 Mio.
	torsional strain	± 180 °/m

Displays / operating elements

Display	switching status	4 x LED, yellow
	operation	1 x LED, green

Accessories

Accessories (optional)	Protective cap: M8, E73005
	DIN rail adapter:, E73006

Remarks

Pack quantity	1 pcs.

Electrical connection

Cable: 10 m, PUR, Halogen-free, black, Ø 6.4 mm; 4 x 0.34 mm² (43 x Ø 0.1 mm) + 2 x 0.75 mm² (21 x Ø 0.2 mm)

Electrical connection - slot

Connector: 4 x M8; coding: A; Moulded body: PBT-GF 20 / brass, nickel-plated; Contacts: gold-plated

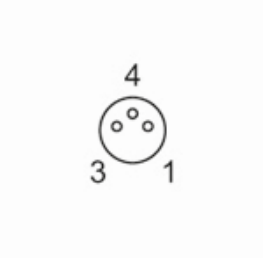

EBC049

Splitter box

ZDO4F035MSS0010H10

Connection

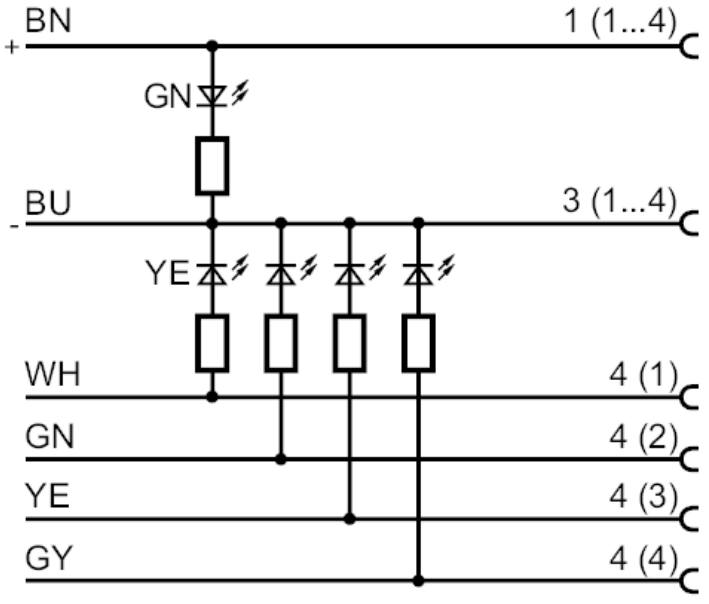

	Core colours :
BN =	brown
BU =	blue
GN =	green
GY =	grey
WH =	white
YE =	yellow