efector200

OA0101

OAS-OOOA

Photoelectric sensors

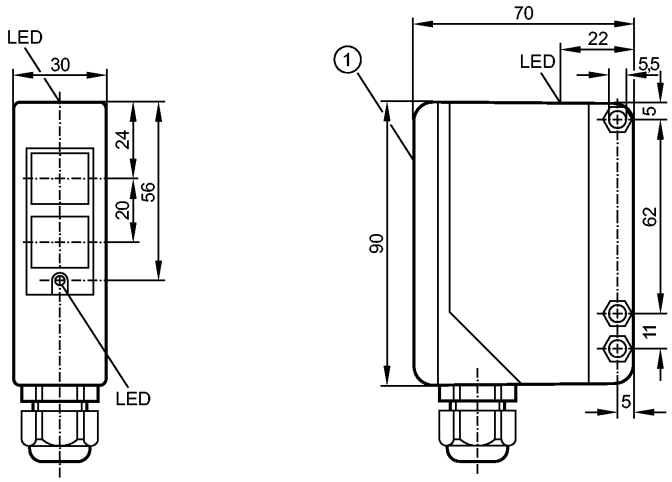

1: Cover

one transmitting diode in upper and lower lens

Made in Germany

Product characteristics		
Through-beam sensor		
Rectangular, plastics		
Terminals		
Transmitter		
Sensing range 50m		
Electrical data		
Electrical design		AC/DC
Operating voltage	[V]	20...250 AC/DC (47...63 Hz AC)
Power consumption	[VA]	< 3.5
Type of light		Infrared light 880 nm
Protection class		II
Reverse polarity protection		no
Outputs		
Short-circuit protection		no
Overload protection		no
Range		
Sensing range	[m]	50
Light spot diameter	[mm]	1500 (at maximum range)
Environment		
Ambient temperature	[°C]	-25...60
Protection		IP 65
Tests / approvals		
EMC		EN 60947-5-2 EN 55011: class B
MTTF	[Years]	393
Mechanical data		
Housing materials		modified PPO
Lens material		PMMA

Weight	[kg]	0.279

Displays / operating elements

Operation	LED	green

Electrical connection

Connection	terminals up to 1.5 mm²; cable diameter 4.5...10 mm, cable gland M16 x 1.5

Wiring

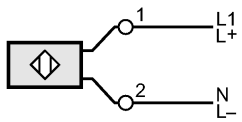

Accessories

Accessories (included)	Angle bracket; E20514; screwdriver

Remarks

Pack quantity	[piece]	1