Brand of NTN corporation

Technical data

UKT209H

Bearing units



Grey cast housing, radial insert ball bearing with adapter sleeve,seal with slinger

KIT CONTENT

UK209G2H, T209

VISUAL (S)

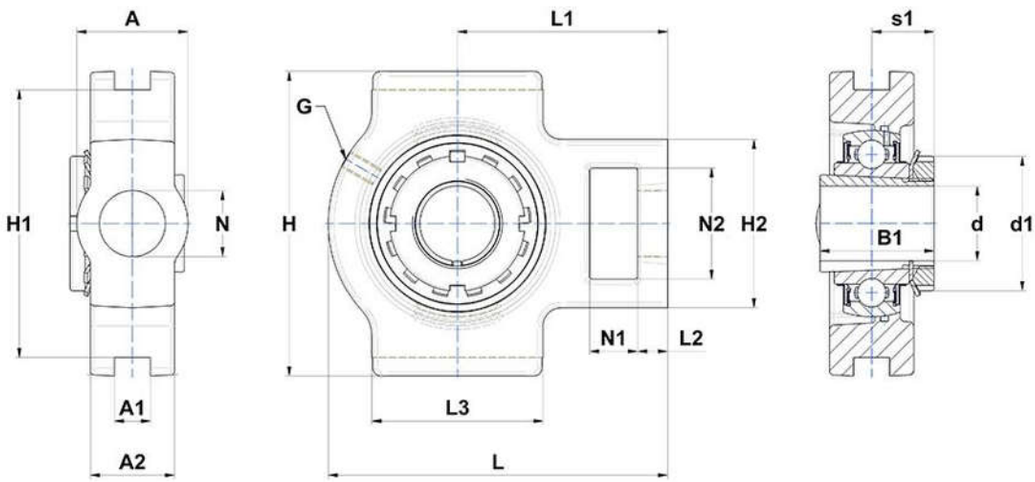

PRODUCT DEFINITION

Brand	SNR
A - Housing width	49 mm
A1 - Width of location slot	16 mm
A2	35 mm
B1 - Overall width Inner Ring	50 mm
d - Shaft diameter	40 mm

PRODUCT DEFINITION	
d1 - Outer dia of eccent. Lock. collar / nut of adapter sleeve	65 mm
G - Grease fitting	M6x1
H - Housing length, width or diameter	117 mm
H1 - Distance between location slots	102 mm
H2 - Housing height / width	83 mm
L - Housing length	144 mm
L1 - Distance attachment end face to bearing centerline	87 mm
L2 - Thickness of attachment end	16 mm
L3 - Length of guidance slot/face	83 mm
N - Mounting hole dimension	29 mm
N1 - Length of attachment slot	19 mm
N2 - Height of attachment slot	49 mm
s1 - Distance nut to middle of bearing raceway	26 mm

PRODUCT PERFORMANCE	
C - Dynamic load rating	31850000 mN
C0 - Static load rating	20800000 mN
Operating temperature min.	253,15 °K
Operating temperature max.	373,15 °K

OTHER FEATURES	
Mass	2,5 kg
Adapter sleeve designation	H2309