8BAC0122.000-1

1 General information

Resolver plug-in module 8BAC0122.000-1 can be used in an ACOPOSmulti slot. The module contains a resolver interface for evaluating BRX resolvers.

The plug-in module evaluates the output from resolvers that are either built into B&R servo motors or used to evaluate external axes. These resolvers return the absolute position over one revolution. The travel path is normally longer than one revolution. In this case, a reference switch must be used and a homing procedure carried out.

The encoder input signals are monitored. This makes it possible to detect open circuits, short circuits and failures of the encoder power supply (reference signal).

During startup, the plug-in module is automatically identified by the ACOPOSmulti drive system's operating system. Making automatic adjustments to the motor (resolution parameter) and reading the motor parameters and limit values is not possible because the resolver does not have parameter memory like the EnDat encoder.

If the precision, resolution, bandwidth or ease of setting parameters is not sufficient with the resolver, the EnDat system should be used.

2 Order data

Model number	Short description	Figure
	Plug-in modules	
8BAC0122.000-1	ACOPOSmulti plug-in module, resolver interface 10 kHz	
	Optional accessories	
	Resolver cables	
8BCR0005.1111A-0	ACOPOSmulti resolver cable, length 5 m, 3x 2x 24 AWG (19x 0.127), speedtec 12-pin female resolver connector, 9-pin male DSUB servo connector, can be used in cable drag chains, UL/ CSA listed	
8BCR0007.1111A-0	ACOPOSmulti resolver cable, length 7 m, 3x 2x 24 AWG (19x 0.127), speedtec 12-pin female resolver connector, 9-pin male DSUB servo connector, can be used in cable drag chains, UL/ CSA listed	
8BCR0010.1111A-0	ACOPOSmulti resolver cable, length 10 m, 3x 2x 24 AWG (19x 0.127), speedtec 12-pin female resolver connector, 9-pin male DSUB servo connector, can be used in cable drag chains, UL/ CSA listed	
8BCR0015.1111A-0	ACOPOSmulti resolver cable, length 15 m, 3x 2x 24 AWG (19x 0.127), speedtec 12-pin female resolver connector, 9-pin male DSUB servo connector, can be used in cable drag chains, UL/ CSA listed	
8BCR0020.1111A-0	ACOPOSmulti resolver cable, length 20 m, 3x 2x 24 AWG (19x 0.127), speedtec 12-pin female resolver connector, 9-pin male DSUB servo connector, can be used in cable drag chains, UL/ CSA listed	
8BCR0025.1111A-0	ACOPOSmulti resolver cable, length 25 m, 3x 2x 24 AWG (19x 0.127), speedtec 12-pin female resolver connector, 9-pin male DSUB servo connector, can be used in cable drag chains, UL/ CSA listed	

Table 1: 8BAC0122.000-1 - Order data

3 Technical data

Model number	8BAC0122.000-1
General information	
Module type	ACOPOSmulti plug-in module
B&R ID code	0x20B6
Slot [1]	Slots 1 and 2
Max. power consumption	1 W
Certifications	
CE	Yes
KC	Yes
UL	cULus E225616 Power conversion equipment
Encoder connection [2]	
Module-side connection	9-pin male DSUB connector
Status indicators	UP/DN LEDs
Electrical isolation	
Encoder - ACOPOSmulti	No
Encoder monitoring	Yes
Max. encoder cable length	100 m
Encoder power supply	
Output voltage	Typ. 3 V_{eff}
Output current	Max. 50 mA_{eff}
Frequency	10 kHz
Protective measures	
Overload protection	Yes
Short circuit protection	Yes
Position	
Resolution @ ü = 0.5 [3]	Number of pole pairs * 22600
Analog inputs	
Digital converter resolution	14-bit
Input impedance	10.4 kΩ - j 11.1 kΩ
Input voltage	Resolver transformation ratio: 0.5 ± 10% [4]
Common-mode voltage	Max. ±20 V
Signal transmission	Differential signals
Environmental conditions	
Temperature	
Operation	
Nominal	5 to 40°C
Maximum	55°C
Storage	-25 to 55°C
Transport	-25 to 70°C
Relative humidity	
Operation	5 to 85%
Storage	5 to 95%
Transport	Max. 95% at 40°C

Table 2: 8BAC0122.000-1 - Technical data

1) The 8BAC0122.000-1 is an encoder module. Two encoder modules can also be connected. In this case, the encoder module in the first slot automatically serves as motor feedback for the first axis; the encoder module in the second slot serves as motor feedback for the second axis. In 1-axis mode, the second slot can be used for other purposes.
2) The resolver must be wired using a cable with a single shield and twisted pair signal lines.
3) This value does not correspond to the encoder resolution that must be configured in Automation Studio (65536).
4) Starting with firmware V2.040, the nominal gear ratio can be configured in the range 0.3 ... 0.5 (default value).
Starting with firmware V2.230, the nominal gear ratio can be configured in the range 0.2 ... 0.5 (default value).

4 Wiring

4.1 Pinout

Figure	X11	Pin	Description [1]	Function	Typical wire colors for the resolver [2]
	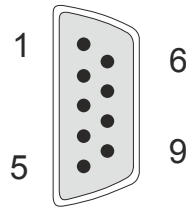	1	T+	Temperature sensor +	---
		2	T-	Temperature sensor -	---
		3	S4	Sine input +	Blue
		4	S1	Cosine input -	Red
		5	R2	Reference output +	Black/White (or yellow/white)
		6	---	---	---
		7	S2	Sine input -	Yellow
		8	S3	Cosine input +	Black
		9	R1	Reference output -	Red/White

Table 3: Resolver interface 8BAC0122.000-1 - Pinout

1) Names are the same as those used by leading manufacturers (Tanagawa, Tyco, LTN).
2) This refers to the wire colors of the lines connected directly to the resolver that are used universally by leading manufacturers (Tanagawa, Tyco, LTN). **These are not the wire colors in B&R resolver cables!**

Danger!

The connections for the motor temperature sensor and encoder are safely isolated circuits. These connections are therefore only permitted to be connected to devices or components that have sufficient isolation per IEC 60364-4-41 or EN 61800-5-1.

Warning!

Temperature sensors are only permitted to be connected to T+ and T- on an ACOPOSmulti plug-in module under the following conditions:

- **The ACOPOSmulti plug-in module is connected in SLOT1 of an ACOPOSmulti module and no temperature sensor is connected to connectors X4A/T+ and X4A/T- of this ACOPOSmulti module.**
- **Only for 8BVIxxxxHxD0.xxx-x inverter modules:**
  The ACOPOSmulti plug-in module is connected in SLOT2 of an ACOPOSmulti module and no temperature sensor is connected to connectors X4B/T+ and X4B/T- of this ACOPOSmulti module.

Otherwise, the temperature monitoring functions on the ACOPOSmulti module may become ineffective, which in extreme cases can cause the hardware (e.g. motors) connected to the ACOPOSmulti module to be destroyed!

4.2 Input/Output circuit diagram

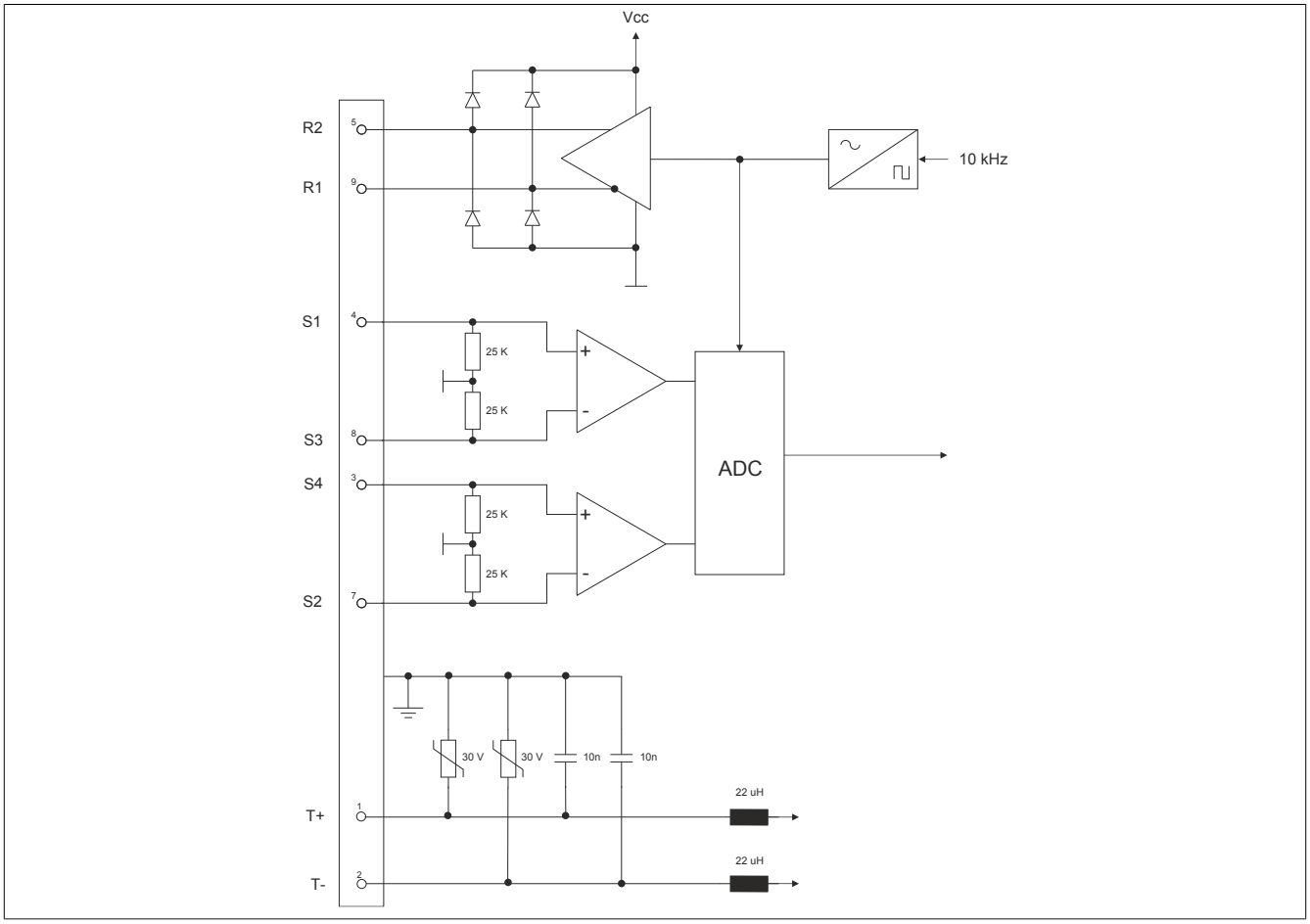

Figure 1: Input/output circuit diagram - Resolver interface 8BAC0122.000-1

5 Status indicators

The indicators (LEDs UP/DN) are located on the front of the ACOPOSmulti drive or power supply module where the plug-in module is installed.

The UP/DN LEDs are lit depending on the rotational direction and the speed of the connected encoder. [1)]

UP LED ... indicates when the encoder position changes in the positive direction.
DN LED ... indicates when the encoder position changes in the negative direction.

6 Firmware

The firmware is part of the operating system for the ACOPOSmulti drive system. Firmware is updated by updating the ACOPOSmulti operating system.

1) The count direction of the encoder can be configured in Automation Studio. Changing the counting direction in Automation Studio does not change the actual counting direction of the encoder, however, and therefore has no effect on the UP/DN LEDs!