E12638

Connecting cable with socket

ADOGH040MSS0005C04

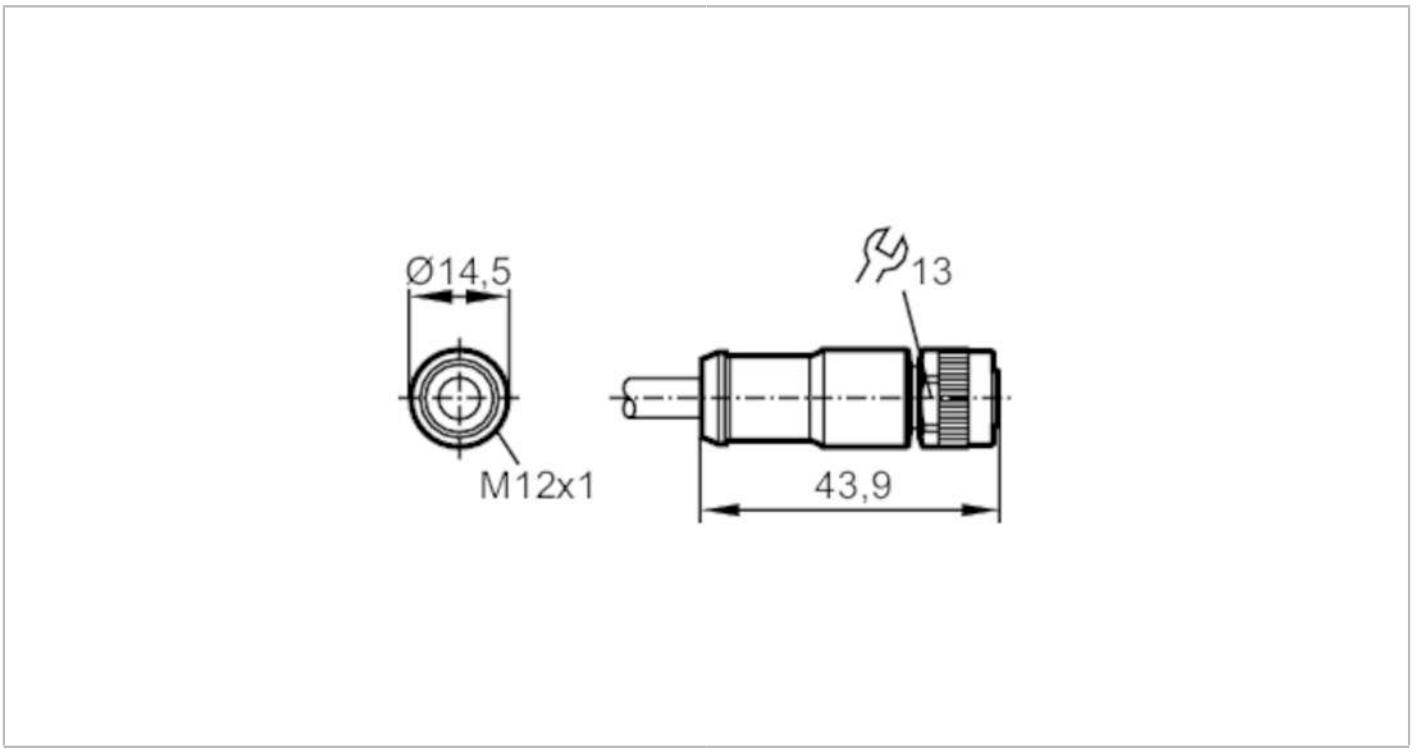

Application			
Special feature		Free from silicone; Halogen-free; Gold-plated contacts; Screened cable; Drag chain suitability	
Free from silicone		yes	
Electrical data			
Operating voltage	[V]	< 50 AC / < 60 DC	
Protection class		III	
Max. current load total	[A]	4	
Operating conditions			
Ambient temperature	[°C]	-25...85	
Note on ambient temperature		21 days: -25...120 °C	
Protection		IP 67	
Mechanical data			
Weight	[g]	269.7	
Dimensions	[mm]	28 x 15 x 38	
Materials		TPU	
Moulded-body material		TPU	
Material nut		diecast zinc	
Drag chain suitability		yes	
Drag chain suitability		bending radius	min. 10 x cable diameter
Remarks			
Pack quantity		1 pcs.	

E12638

Connecting cable with socket

ADOGH040MSS0005C04

Electrical connection

Cable: 5 m, PUR, Halogen-free, black, Ø 5 mm, shielded; 4 x 0.34 mm² (42 x Ø 0.1 mm)

Electrical connection - socket

Connector: 1 x M12, straight; coding: A; Moulded body: TPU; Locking: diecast zinc; Contacts: gold-plated; Tightening torque: 0.7...0.9 Nm; Shielded connection cable: screen not connected



Connection

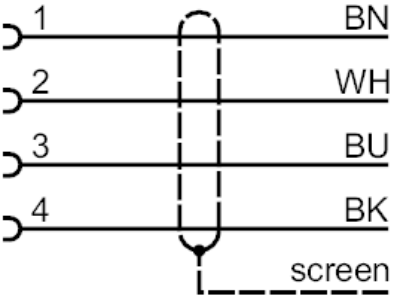

	Core colours :
BK =	black
BN =	brown
BU =	blue
WH =	white