TS4759

Temperature cable sensor with screw-in sensor

TS-PT100-SCREW-IN M5/4M

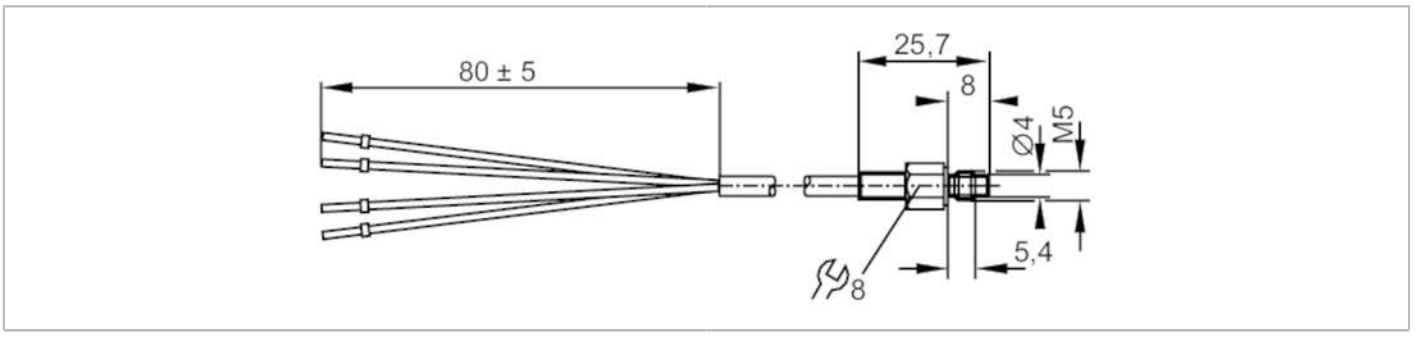

CE

Product characteristics			
Measuring range		-30...180 °C	-22...356 °F
Process connection		threaded connection M5 external thread	
Application			
Measuring element		1 x Pt 100; (to DIN EN 60751, class A)	
Installation		surface mount RTD for solid bodies	
Electrical data			
Protection class		III	
Measuring/setting range			
Measuring range		-30...180 °C	-22...356 °F
Accuracy / deviations			
Accuracy	[K]	± (0,15 K + 0,002 x|t|)	
Response times			
Dynamic response T05 / T09	[s]	3 / 8; (to DIN EN 60751)	
Operating conditions			
Protection		IP 67	
Tests / approvals			
MTTF	[years]	12683.9	
Mechanical data			
Weight	[g]	159.6	
Housing		cylindrical	
Design		screw-in sensor	
Materials		stainless steel (316L/1.4404)	
Process connection		threaded connection M5 external thread	
Probe diameter	[mm]	4	
Remarks			
Pack quantity		1 pcs.	

TS4759

Temperature cable sensor with screw-in sensor

TS-PT100-SCREW-IN M5/4M

Electrical connection

Cable: 4 m, silicone

Connection

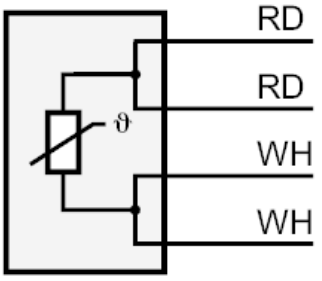

	Core colours :
RD =	red
WH =	white