6741/6742 Medium Pressure Switch

herga Technology Ltd

- These switches have been designed primarily for the OEM manufacturer who requires high reliability
- UL recognised versions available
- Double pole switching available as a 6742
- Wide choice of microswitch options including tag configurations
- High performance repeatability



Outline dimensions

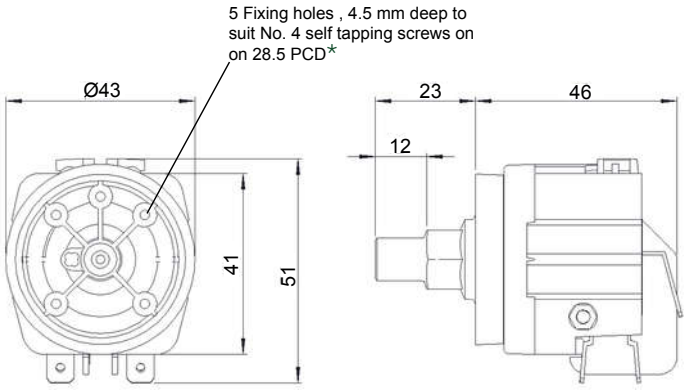

* Note - Fixing holes not available in 6741 and 6742-70/80/90 models; fixing method by connector only

Stock model 6742-30

6741/6742 - Range options and specifications

Model part no.		6741 and 6742 -20/30/40/50/60					6741 and 6742 -70/80/90		
Pressure Range Min.	mbar	100	200	340	540	1080	1700	3100	4140
Pressure Range Max.	mbar	240	370	680	1220	2040	3790	5170	8270
Body withstand pressure	mbar	2550					10000		
Connecting tube reference		2311-01 / 2311-08 to suit Ø4 mm spout							
Diaphragm		Neoprene					Nitrile		
Mechanical life	Cycles	1×10^6							
Spring		Spring steel							

Electrical data

Model		6741	6742
Contact configuration		SPCO	DPCO
Contact plating		Silver	
Electical life	Cycles	2×10^5 @ 10A 1×10^4 @ 21A	
Electrical rating		Maximum electrical load	
	Voltage (V)	Resistive (A)	Inductive (A)	Motor (Pf0.75)
AC	125	21	8	1HP
AC	250	21	8	2HP
DC	6	21	21	
DC	12	15	15	
DC	24	8	7	
DC	60	1	0.5	
DC	110	0.5	0.2	
DC	220	0.25	0.1	

VARIOHM HOLDINGS

6741/6742 Medium Pressure Switch

herga Technology Ltd

General specifications

Standards/approvals	UL 508 specific models only
Degree of protection	n/a
Connection method	1/8" BSPT & NPT Brass or back & side entry spout, Ø4 mm
Electrical rating	See table
Contact configuration	See table

Operating temperature range	-5ºC to +70ºC
Body material	Thermoplastic
Weight	0.05 kg 6741 & 0.085 kg 6742
Additional information	Setting accuracy ±10% For very low power circuits, gold contact versions are available upon request Allternative diaphragm & spring materials available upon request

Suitability for use with the following media:

	6741-20/30/40/50/60	6741-70/80/90
Acetone	☑	☑
Ammonia (Liquid)	☑	☑
Amyl Alcohol to 20°C	☑	☑
Automotive Brake Fluid	☑	☑
Beer	☑	☑
Benzyl Alchohol	×	☑
Butane	✓	✓
Carbon Dioxide – Dry	✓	✓
Citric Acid	✓	✓
Copper Sulphate (Sol.)	☑	☑
Compressed Air	✓	✓
Cutting Oil	☑	✓
Diesel Oil	☑	✓
Detergent Solution	☑	✓
Fuel Oil	☑	✓

	6741-20/30/40/50/60	6741-70/80/90
Glycol	✓	✓
Hydraulic Oil	☑	✓
Hydrogen	✓	✓
Lubricating Oil	☑	✓
Milk	☑	☑
Mineral Oil	☑	✓
Natural Gas	✓	✓
Nitric Acid (Dil.)	×	☑
Oxygen to 70°C	✓	✓
Petrol	☑	✓
Plating Solution (Chrome)	☑	☑
Salt Water	☑	☑
Sewage	☑	✓
Sulphur Dioxide	×	☑
Turpentine	☑	✓
Vinegar	☑	☑
Water	✓	✓

✓ = **Recommend**

☑ = **Suitable with modification**

× = Not suitable

6741/6742: Mounting plate details

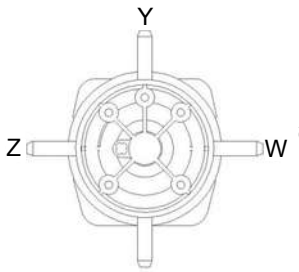

Non-standard tube connection positions for Ø4 spout

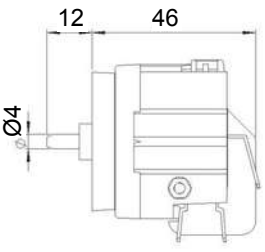

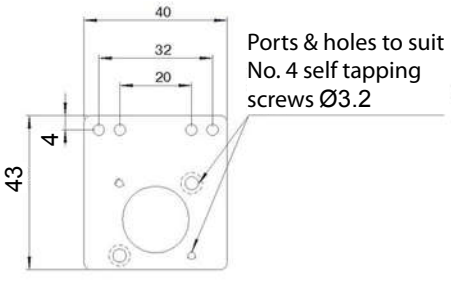

Mounting plate & 2 screws
6050-6000-0001

VARIOHM HOLDINGS

Herga Technology Ltd - Northern Way - Bury St. Edmunds - Suffolk - IP32 6NN - UK
sales@herga.com • www.herga.com • +44 (0)1284 701422

Subject to change without notice