Product data sheet

LLTHC 30 LU T0 P5

Slim-line carriage, extended length, standard height



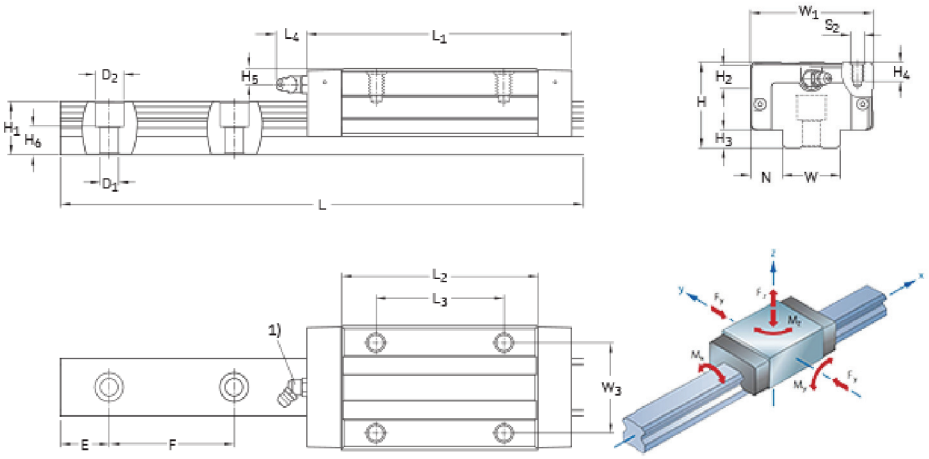

Size:	30
W1 [mm]:	60
N [mm]:	16
H [mm]:	42
H2 [mm]:	11.3
H3 [mm]:	9
L1 [mm]:	125.4
L2 [mm]:	92.4
L3 [mm]:	60
L4 [mm]:	14.6
W3 [mm]:	60
H4 [mm]:	8.5
H5 [mm]:	8

Date: 19/02/2019

® SKF is a registered trademark of the SKF Group.
© SKF 2010
The contents of this report are the copyright of the publisher and may not be reproduced (even extracts) unless permission is granted. Every care has been taken to ensure the accuracy of the information contained in this report but no liability can be accepted for any loss or damage whether direct, indirect or consequential arising out of the use of the information contained herein.

Product data sheet

LLTHC 30 LU T0 P5

Slim-line carriage, extended length, standard height

D3 [mm]:	
S2:	M8
W [mm]:	28
H1 [mm]:	26
H6 [mm]:	13.8
F [mm]:	80
D1 [mm]:	9
D2 [mm]:	14
Emin [mm]:	12
Emax [mm]:	70
Lmax [mm]:	3944
Weight [kg]:	0.82
Weight [kg/m]:	4.8
C [N]:	33900
C0 [N]:	60800
Mx[Nm]:	428
Mxo [Nm]:	767
M Y/Z[Nm]:	466
M Y0/Z0[Nm]:	836
Preload class:	Zero preload T0
Precision class:	Standard P5

Date: 19/02/2019

® SKF is a registered trademark of the SKF Group.
© SKF 2010
The contents of this report are the copyright of the publisher and may not be reproduced (even extracts) unless permission is granted. Every care has been taken to ensure the accuracy of the information contained in this report but no liability can be accepted for any loss or damage whether direct, indirect or consequential arising out of the use of the information contained herein.