BES M12MI-PSC40B-BV03
Ordering code: BES0001

Inductive sensor
Global
M12x53 mm

DC, direct current
PNP/Normally open (NO)
Sn= 4 mm
Flush (shielded)
■■

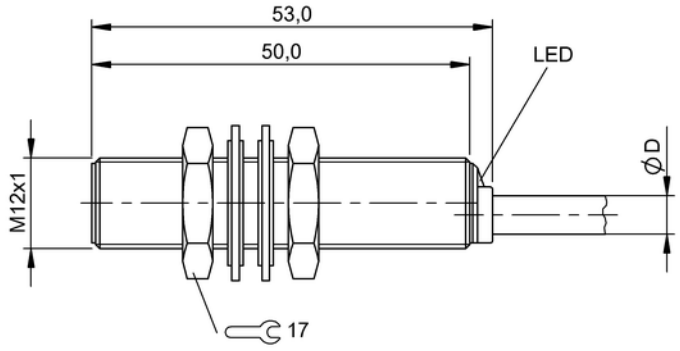

Characteristic data

Assured operating distance Sa	3,2
Eff. switching distance Sr	4 mm
Tolerance Sr	±10 %
Hysteresis H max. (in % of Sr)	15 %
Repeat accur. R max. (% of Sr)	5 %
Ambient temperature	-25...70 °C
Temp. drift max. (% of Sr)	10 %
Switching freq. f max.	500 Hz
Ready delay tv max.	30 ms
Utilisation category	DC 13
Function indicator	Yes
Power indicator	No
Short-circuit protected	Yes
Protected against polarity reversal	Yes
Protected against miswiring	Yes
Enclosure Type per IEC 60529	IP68 according to BWN PR 20
Protection class	II
Principle of operation	Inductive

Electrical data

Operating voltage	12...30 V DC
Ripple max. (% of Ue)	15
Rated operating voltage Ue DC	24 V
Voltage drop static max.	2,5 V
Rated insulation voltage Ui	250 AC
Effective operating current Ie	200 mA
No-load current Io damped max.	10 mA
Max. no-load cur. Io undamped	5 mA
Off-state current Ir max.	20 µA
Minimum operating current Im	0 mA
Rated short circuit current	100 A
Output resistance Ra	33.0k + D
Load capacitance max. (at Ue)	1 µF

Mechanical data

Connection type	Cable
Cable diameter D max.	4,7 mm
Cable short designation	LiY-Y-O
Cable length	3 m
Number of conductors	3
Conductor cross-section	0.34 mm²
Housing material	CuZn
Oberflächenschutz	Nickel-plated
Sensing surface material	PA 12
Cable jacket material	PVC
Mounting length	50 mm
Shock rating	Shock, half-sinus, 30 gn, 11ms
Vibration rating	55 Hz, 1 mm ampl., 3x30 min
Degree of contamination	3
Tightening torque	15 Nm

Basic data

Basic standard	IEC 60947-5-2

Remarks

The sensor is functional again after the overload has been eliminated.
Embeddable: See installation notes for inductive sensors with extended switching distance 825357.

LISTED IND. CONT. EQ. 81U2 for use in the secondary of a class 2 source of supply

BES M12MI-PSC40B-BV03
Ordering code: BES0001

Inductive sensor
Global
M12x53 mm

DC, direct current
PNP/Normally open (NO)
Sn= 4 mm
Flush (shielded)
■■

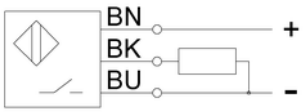

Internet : www.balluff.com
Balluff Germany : +49 (0) 7158 173-0, 173-370
Balluff USA : 1-800-543-8390
Balluff China : +86 (0) 21-50 644131