Foot-switch Protective guard
Series F3

Description **F3-UN-HAUBE M.FKZ KOMP.**	Article number **3906030721**

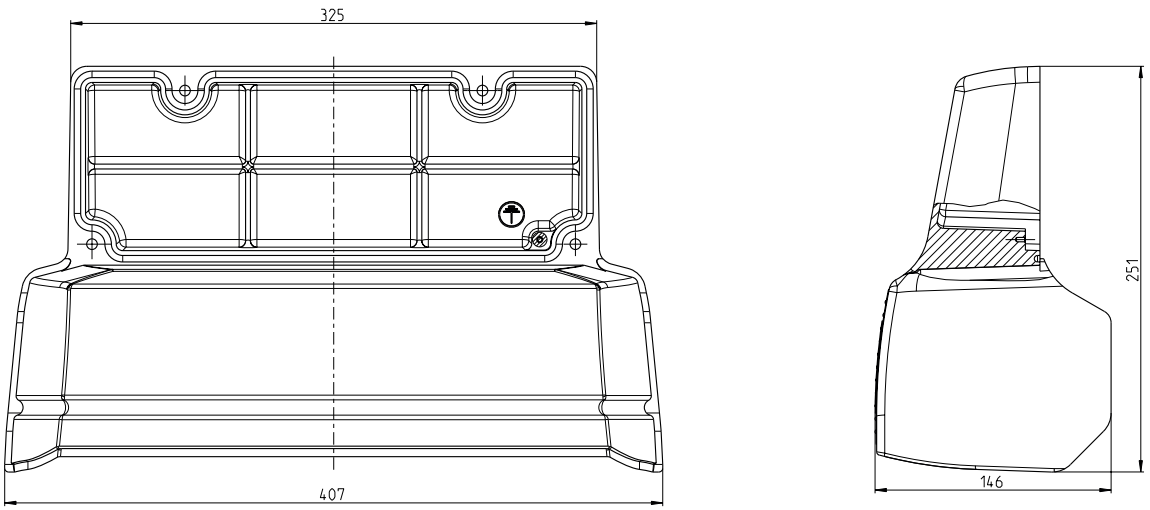

Mechanical data	
Protective hood	Aluminium casting alloy, colour: RAL 3016 (coral red)
Gasket	Foam rubber
Screw	4 x M6 screw (galvanized)

Application
Suitable for the corresponding BERNSTEIN foot switches series F3.