# MSM LA 19

Metal Switch, Latching Action, Switching Voltage up to 125 VDC / 250 VAC



MSM 19 LA LE RI blue

RoHS COMPLIANT

## Description

- Switch available in version: Standard (ST), with Lettering (LE), with Point Illumination (PI), with Ring Illumination (RI)
- Assembly by mounting with nut and subsequent clipping of the switching element
- Equipped with flat-pin plugs to permit fast connection

## Standards

- DIN EN 61058-1
- UL 1054

## Approvals

- Low Voltage Directive 2006/95/EC Low Voltage Directive 2006/95/EC
- KEMA / ENEC File Number (Marquardt): 2106068.01
- UL / CSA File Number (Marquardt): E41791

## Characteristics

- Housing and actuator material: high-quality stainless steel
- Variety of design options regarding size, colour, illumination, connection or lettering
- Switching voltage up to 125 VDC respectively 250 VAC, switching current up to 12 A
- optional with point or ring illumination
- available with single-pole and double-pole switching system, switching status is easy to discern by looking at or feeling the resting position of the actuator
- for use in harsh environments

## References

Alternative: Standard version MSM 19
Alternative: double-pole switch: MSM DP 19
Alternative: switch with backlighted illumination: MSM CS 19

## Weblinks

html-datasheet, General Product Information, CE declaration of conformity, RoHS, CHINA-RoHS, e-Shop, CAD-Drawings, Product News, Detailed request for product

## Technical Data

| | |
|---|---|
| Switching Function | N.O. |
| Number of Poles | 1 pole and 2 pole |
| Supply Voltage | 24 VDC Ring Illumination, Point Illumination without series resistor, LED operating data are listed in a separate table |
| Surge Strength | 4 kV MSM ST / MSM LE |
| Switching Voltage | max. 250 VAC 30 VDC (125 VDC at 0.5 A), |
| Switching Current | max. 12 A AC |
| Rated Switching Capacity | 3000 W |
| Lifetime | 0.05 million actuations (250 VAC / 8 A), 0.1 million actuations (125 VDC / 0.5 A) |
| Contact Resistance | < 100 mΩ (12 VDC / 1 A) |
| Insulation Resistance | > 100 MΩ 500 VDC |
| Actuating Force | 10 N |
| Actuating Travel | 5.2 mm, |
| Lifetime | 0.1 million actuations |
| Contact Gap | 3 mm |
| Shock Protection | IK 07 |
| Tightening Torque Plastic Nut | 4.5 Nm for thread M19, 3.5 Nm for M22 |
| Tightening Torque Stainless Steel Nut | 12 Nm for thread M19, 16 Nm for M22 |

| | |
|---|---|
| Operating Temperature | -20 to +85 °C |
| Storage Temperature | -20 to +85 °C |
| IP-Protection | IP 64 Front Side Contact Area, IP 40 Front Side mechanical, IP 00 Rear Side |
| Salt Spray Test (acc. to DIN 50021-SS) | 24 h / 48 h / 96 h Residence Time |
| Housing | Stainless Steel |
| Actuator (disc, outside housing) | Stainless Steel |
| Illuminated Ring (die-casting, inside housing) | PC |
| Gasket | NBR70 |
| Switcher Collet | PA66 (UL94-V0 related to d ≥ 1.6 mm) |
| Intermediate Connector | PA66 (UL94-V0 related to d ≥ 1.6 mm) |
| Contact Pin Adapter | PA66 (UL94-V0 related to d ≥ 1.6 mm) |

## Dimension

MSM 19 LA ST / LE double-pole

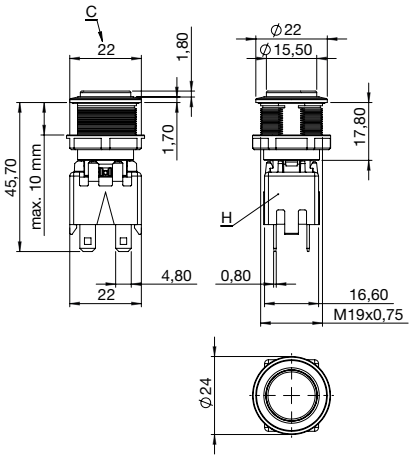


MSM 19 LA PI double-pole

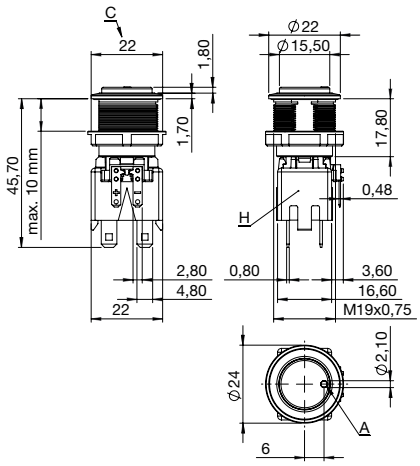


MSM 19 LA RI double-pole

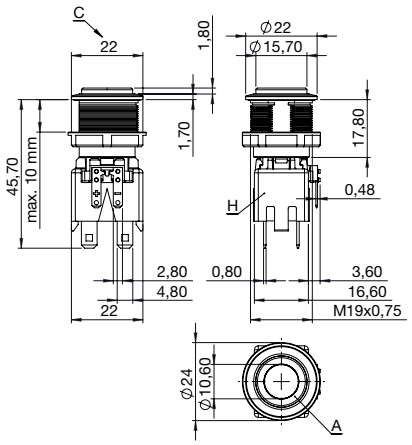


Switching Element single-pole with Push Button Holder

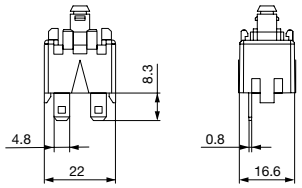


***Legend***
A = Illumination Area
C = Width Across Flats
D = Nut
H = Switching Element

## Dimension

MSM 19 LA ST / MSM 19 LA RI

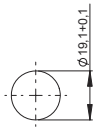


Drilling diagram

MSM 19 LA LE / MSM 19 LA PI / MSM 19 LA RI optional

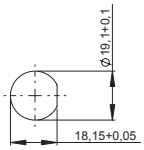


Drilling diagram

## Assembly Instructions

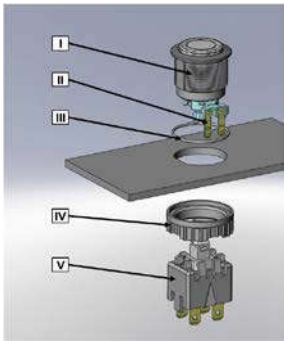


I Housing
II Flat Pin Terminal (Illumination)
III Gasket
IV Nut (Nut type see Dimensions)
V Module Switching Contact

Installation Instruction:
1.) Place the gasket accurately on the actuator housing. Then mount the actuator housing assembly into the panel.
2.) Tighten the screw nut according to the torque instructions.
3.) Clasp the module switching contact into the actuator housing.

Installation information:
1.) The power supply and the configuration of the flat pin terminals have to be installed correctly for the illumination and micro switch function.
2.) Insulate the terminals as required. Fully insulated plug-in sleeves are recommended.
3.) Installation instructions according to VDE-standard DIN VDE 0100-100 or alternatively IEC 60354 standard

## Diagrams

MSM LA ST / LE single-pole

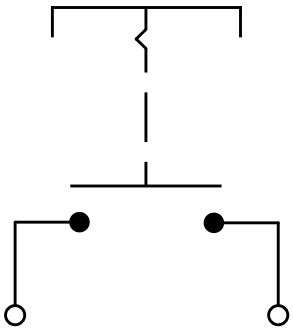

MSM LA ST / LE double-pole

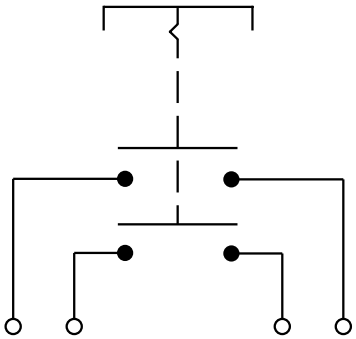

MSM LA PI single-pole

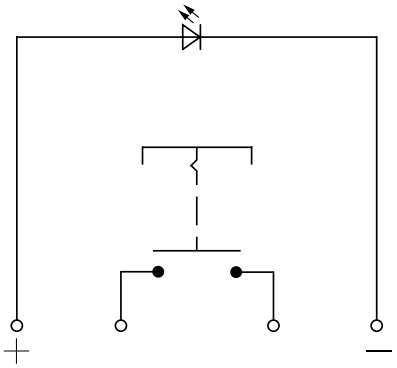

MSM LA PI double-pole

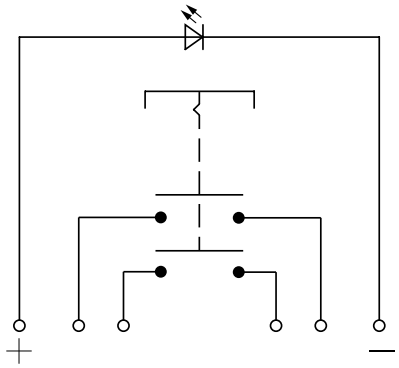

MSM LA RI single-pole



MSM LA RI double-pole



Contact Layout single-pole

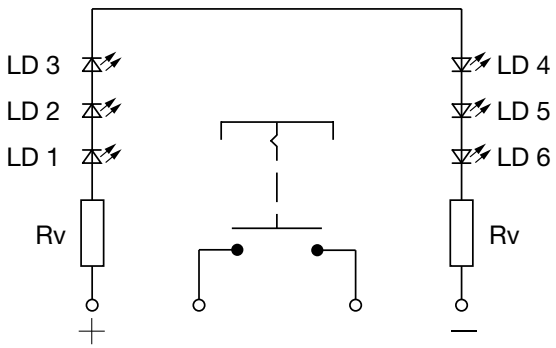


Contact Layout double-pole

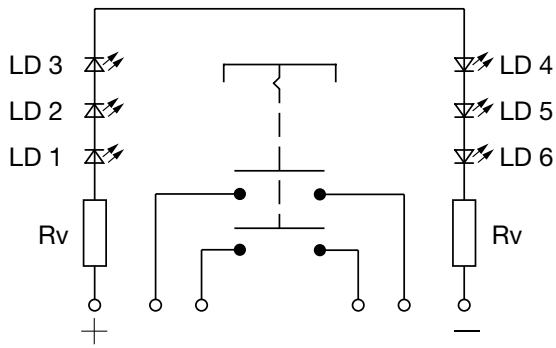


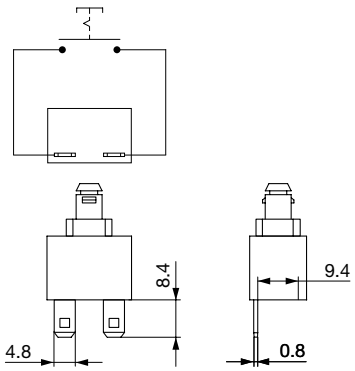


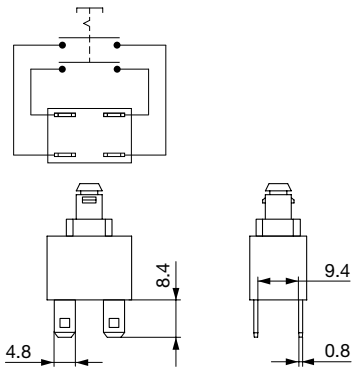

## Point Illumination

| Operating Data | Forward Current max. | Forward Current at 10 mA | Forward Current at 8 mA | Forward Current max. |
|---|---|---|---|---|
| **LED red** | 30 mA | 1,9 VDC | | 3,0 VDC |
| **LED green** | 30 mA | 2,1 VDC | | 3,0 VDC |
| **LED blue** | 20 mA | | 3,7 VDC | 4,5 VDC |
| Attention: Switches are delivered without series resistor. | | | | |

## Lettering

| The last three digits in the order number define the lettering: | |
|---|---|
| 000 | No Lettering |
| 001-074 | Standard Lettering |
| 101- | Customized Lettering |

## Lettering Colour of Laser Lettering

| Material | Lettering Colour | |
|---|---|---|
| Stainless Steel | black | Filled letters |
| For further Lettering details see also weblink: | | |
| General Product Information | | |

## Order Index Lettering

| Laser Marking | | | |
|---|---|---|---|
| 001 = **A** | 021 = **U** | 041 = ÷ | 061 = **EIN** |
| 002 = **B** | 022 = **V** | 042 = ✳ | 062 = **AUS** |
| 003 = **C** | 023 = **W** | 043 = **=** | 063 = **AUF** |
| 004 = **D** | 024 = **X** | 044 = # | 064 = **AB** |
| 005 = **E** | 025 = **Y** | 045 = ↔ | 065 = **ON** |
| 006 = **F** | 026 = **Z** | 046 = ↕ | 066 = **OFF** |
| 007 = **G** | 027 = **0** | 047 = → | 067 = **UP** |
| 008 = **H** | 028 = **1** | 048 = ← | 068 = **DOWN** |
| 009 = **I** | 029 = **2** | 049 = ↓ | 069 = **HIGH** |
| 010 = **J** | 030 = **3** | 050 = ↑ | 070 = **LOW** |
| 011 = **K** | 031 = **4** | 051 = % | 071 = **ON/OFF** |
| 012 = **L** | 032 = **5** | 052 = √ | 072 = **START** |
| 013 = **M** | 033 = **6** | 053 = **CTRL** | 073 = **RESET** |
| 014 = **N** | 034 = **7** | 054 = **RETURN** | 074 = ⏻ |
| 015 = **O** | 035 = **8** | 055 = **SHIFT** | 075 = 💡 |
| 016 = **P** | 036 = **9** | 056 = **LOCK** | 076 = 🔔 |
| 017 = **Q** | 037 = **+** | 057 = **STOP** | |
| 018 = **R** | 038 = **-** | 058 = **ENTER** | |
| 019 = **S** | 039 = **.** | 059 = **BACK** | |
| 020 = **T** | 040 = x | 060 = **LINE** | |

## All Variants

| Diameter | Number of Poles | Illumination, LED | Torsion Protection | Config. Code | Order Number | |
|---|---|---|---|---|---|---|
| [mm] | | | | | | |
| 19 | 1 pole | non-illuminated | yes | MSM 19 LA ST | 1241.6821.1110000 | ▮ |
| 19 | 1 pole | Point Illumination, red | yes | MSM 19 LA PI red | 1241.6823.1111000 | |
| 19 | 1 pole | Point Illumination, green | yes | MSM 19 LA PI green | 1241.6823.1112000 | |
| 19 | 1 pole | Point Illumination, blue | yes | MSM 19 LA PI blue | 1241.6823.1114000 | |
| 19 | 1 pole | Ring Illumination, red, 24 VDC | yes | MSM 19 LA RI red | 1241.6824.1111000 | |
| 19 | 1 pole | Ring Illumination, green, 24 VDC | yes | MSM 19 LA RI green | 1241.6824.1112000 | ▮ |
| 19 | 1 pole | Ring Illumination, blue, 24 VDC | yes | MSM 19 LA RI blue | 1241.6824.1114000 | ▮ |
| 19 | 1 pole | Ring Illumination, white, 24 VDC | yes | MSM 19 LA RI white | 1241.6824.1115000 | ▮ |
| 19 | 2 pole | non-illuminated | yes | MSM 19 LA ST | 1241.6821.1120000 | ▮ |
| 19 | 2 pole | non-illuminated | yes | MSM 19 LA LE | 1241.6822.1120000 | |
| 19 | 2 pole | Point Illumination, red | yes | MSM 19 LA PI red | 1241.6823.1121000 | ▮ |
| 19 | 2 pole | Point Illumination, green | yes | MSM 19 LA PI green | 1241.6823.1122000 | ▮ |
| 19 | 2 pole | Point Illumination, blue | yes | MSM 19 LA PI blue | 1241.6823.1124000 | ▮ |
| 19 | 2 pole | Ring Illumination, red, 24 VDC | yes | MSM 19 LA RI red | 1241.6824.1121000 | ▮ |
| 19 | 2 pole | Ring Illumination, green, 24 VDC | yes | MSM 19 LA RI green | 1241.6824.1122000 | ▮ |
| 19 | 2 pole | Ring Illumination, blue, 24 VDC | yes | MSM 19 LA RI blue | 1241.6824.1124000 | ▮ |

Legend:
Type: MSM
CS = Ceramic Surface
ST = Standard: not lettered
LE = Lettering: lettered
AI = BL = Full Surface Backlighting: Lettering possilbe (see Lettering, last 3 digits)

Customer-specific versions available on request.
Special materials for use in salt and chlorinated environment on request.

The nut with gasket and micro switch are enclosed in the box.

▮ Most Popular.

Availability for all products can be searched real-time:http://www.schurter.com/en/Stock-Check/Stock-Check-SCHURTER

**Packaging unit** 10 in box with insert



- Actuating elements in ESD safe packaging
- Screw nuts and sealing rings in a bag (enclosd in the box)
- Micro switches in a bag (enclosed in the box)

02.02.2015



The specifications, descriptions and illustrations indicated in this document are based on current information. All content is subject to modifications and amendments. Information furnished is believed to be accurate and reliable. However, users should independently evaluate the suitability and test each product selected for their own applications.