SMD thermal fuse for high currents

new



60 VDC · up to 100 A · 210 °C · PCB, SMT

See below:
Approvals and Compliances

Description

- Patented surface mount thermal fuse to protect against thermal runaway of power semiconductors such as: MOSFET's, IC's, IGBT's, Triac's, SCR's, etc.
- Provides physical protection in cases where all software-based security measures have failed

Unique Selling Proposition

- Separates rated voltages up to 60VDC
- Reflow compatible through mechanical activation procedure
- Galvanic separation happens inside the RTS housing
- Smallest footprint with just two contacts

Applications

- Wherever power transistors are used
- Automotive: Cooling fan applications, ABS power steering, PTC heaters, HVAC, Glow plugs, Diesel fuel heaters
- Industrial: Battery Protection, Power supplies, Lighting ballasts, H-Bridge circuits, Motor drivers

Other versions on request

- Thermal fuse with integrated shunt
- Thermal fuse with integrated fuse

Weblinks

pdf datasheet, html-datasheet, General Product Information, Packaging details, Distributor-Stock-Check, Detailed request for product, Landing Page, Video

Technical Data

Rated Voltage	60 VDC
Breaking Capacity	400 A
Operating current	up to 100 A
Mounting	PCB,SMT
Allowable Operation Temperature	-40 °C to +150 °C
Tripping temperature	210 °C
Material: Housing	Plastics
Material: Terminals	Tin-Plated Copper Alloy
Unit Weight	0.75 g
Storage Conditions	0 °C to 40 °C, max. 70% r.h.
Product Marking	Variant Code, Lot no.

Maximum reflow temperature	260 °C (peak)
Soldering Methods	Reflow Soldering Profile
Solderability	245 °C / 3 sec acc. to IEC 60068-2-58
Resistance to Soldering Heat	260 °C / 30 sec acc. to IPC/JEDEC J-STD-020D, Level 1
Activation force	Fa = max. 50 N
Activation distance	Sa = 1.1 ± 0.1 mm

Approvals and Compliances

Detailed information on product approvals, code requirements, usage instructions and detailed test conditions can be looked up in Details about Approvals

SCHURTER products are designed for use in industrial environments. They have approvals from independent testing bodies according to national and international standards. Products with specific characteristics and requirements such as required in the automotive sector according to IATF 16949, medical technology according to ISO 134485 or in the aerospace industry can be offered exclusively with customer-specific, individual agreements by SCHURTER.

Application standards

Application standards where the product can be used

Organization	Design	Standard	Description
IEC	Designed for applications acc.	IEC/UL 60950	IEC 60950-1 includes the basic requirements for the safety of information technologyequipment.

Compliances

The product complies with following Guide Lines

Identification	Details	Initiator	Description
RoHS COMPLIANT	RoHS	SCHURTER AG	EU Directive RoHS 2011/65/EU
REACH	REACH	SCHURTER AG	On 1 June 2007, Regulation (EC) No 1907/2006 on the Registration, Evaluation, Authorization and Restriction of Chemicals 1 (abbreviated as "REACH") entered into force.
AEC Q200	Automotive	SCHURTER AG	AEC-Q200 is a test standard for passive components used in automotive applications. SCHURTER tests components according to the customer's agreement and is certified according to IATF 16949.

Dimension [mm]

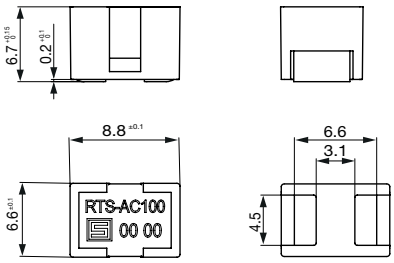

Reflow soldering pads

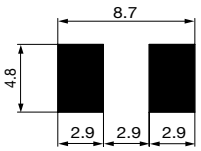

Activation status

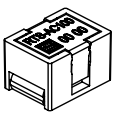

Deactivated

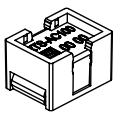

Activated: must be mechanically activated after reflow

Activation specification

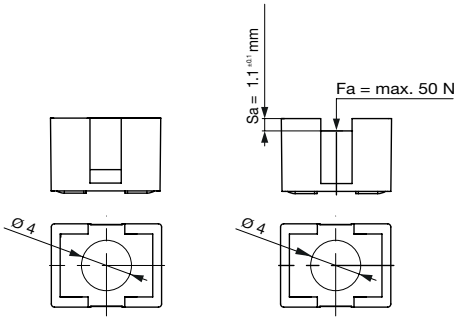

Diagrams

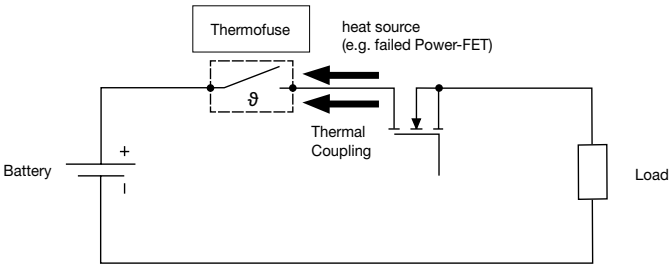

All Variants

Cold Resistance typ. (max.)	Packaging unit [PCS]	Order Number
95 µΩ (120 µΩ)	100	3-104-513
95 µΩ (120 µΩ)	750	3-104-514

Availability for all products can be searched real-time:https://www.schurter.com/en/Stock-Check/Stock-Check-SCHURTER

Nominal Current: < 100 A

Nominal Current depends on the implementation on the board (Cu area/ thickness)

Breaking Capacity: 400 A @ 24 VDC (> 18 µH) / 200 A @ 50 VDC (> 27 µH) / 170 A @ 60 VDC (> 32 µH)

All measurements carried out on a board based on IEC 60127-4 with 20 mm track width and 70 µm copper layer thickness

Packaging Unit Blister Tape 33 cm Reel in ESD Plastic Bag

07.03.2018

The specifications, descriptions and illustrations indicated in this document are based on current information. All content is subject to modifications and amendments. Information furnished is believed to be accurate and reliable. However, users should independently evaluate the suitability and test each product selected for their own applications.