E23013

Radar corner reflector

RADAR CORNER REFLECTOR 100

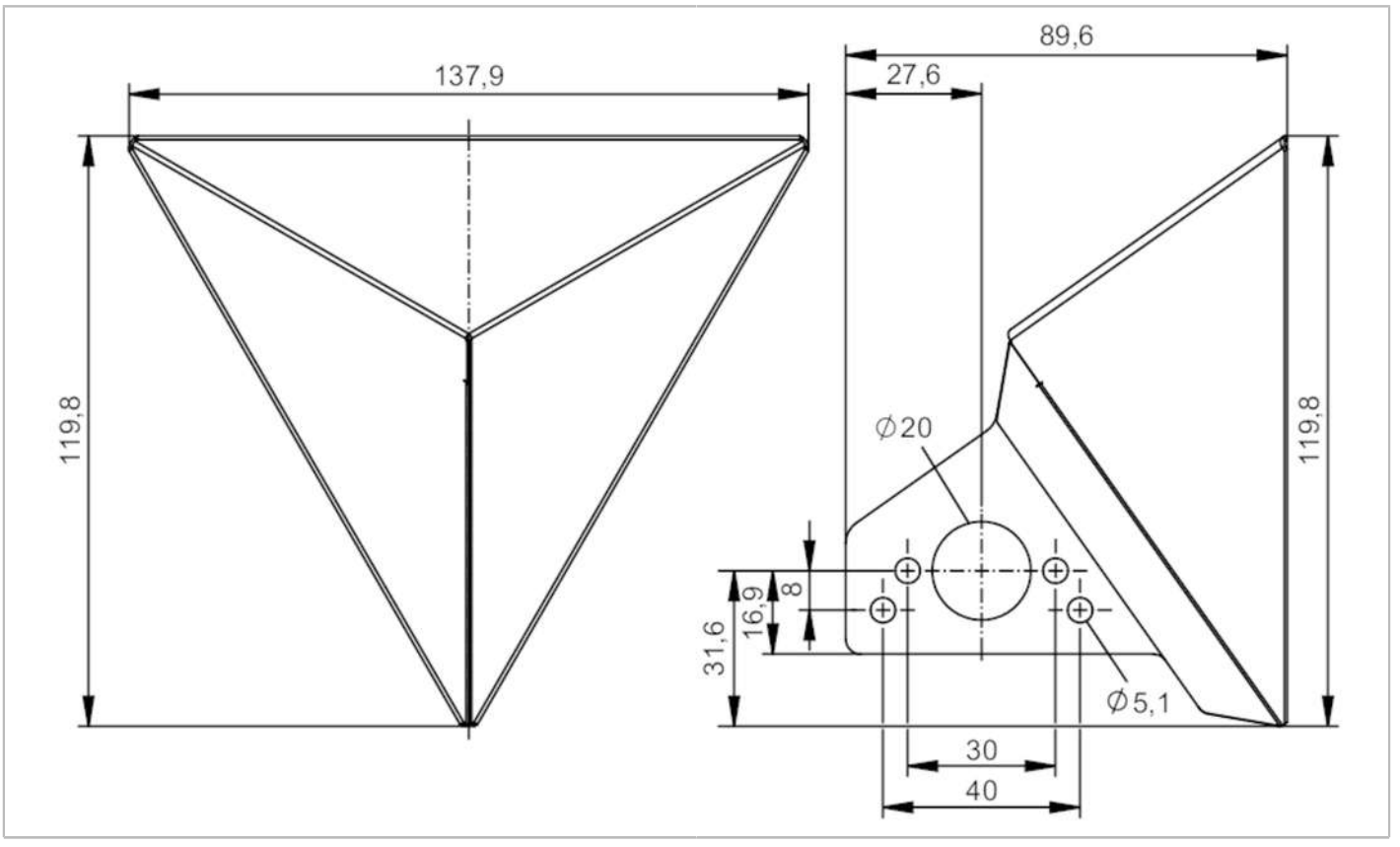

Application		
Design		Winkelreflektor
Mechanical data		
Weight	[g]	28619
Dimensions	[mm]	89.6 x 119.8 x 137.9
Materials		stainless steel (1.4571/316Ti)
Remarks		
Pack quantity		1 pcs.