

Image may differ from product. See technical specification for details.

SALKAC 16 M

Rod end, requires maintenance, male thread

These SKF rod ends contain a spherical plain bearing with a steel/bronze sliding contact surface combination. The bearing requires maintenance, sizes 6 and larger can be relubricated via a grease fitting in the housing and via the shank. The male thread is available with a left- (prefix SAL) or right-hand thread.

- Suitable where lubricant starvation might occur
- Simple and ready-to-mount
- Easy to relubricate (sizes ≥ 6)

Overview

Dimensions

Bore diameter, bearing inner ring	16 mm
Outside diameter, housing eye	43 mm
Width, bearing inner ring	21 mm
Thread designation	M 16
Width, housing eye	15.5 mm
Centre height, housing (from end of shank)	66 mm
Housing length, total	89 mm

Performance

Basic dynamic load rating	21.6 kN
Basic static load rating	23.2 kN

Properties

Sliding contact surface combination	Steel/bronze
Material, housing	Steel
Material, inner ring	Bearing steel
Maintenance	Relubrication required
Attachment feature, rod end shank	Left-hand male thread
Sealing	Without

Logistics

Product net weight	0.21 kg
eClass code	23-05-01-05
UNSPSC code	31171508

Technical specification

Maintenance	Relubrication required
Sliding contact surface combination	Steel/bronze
Material, inner ring	Bearing steel
Sealing	Without
Attachment feature, rod end shank	Left-hand male thread

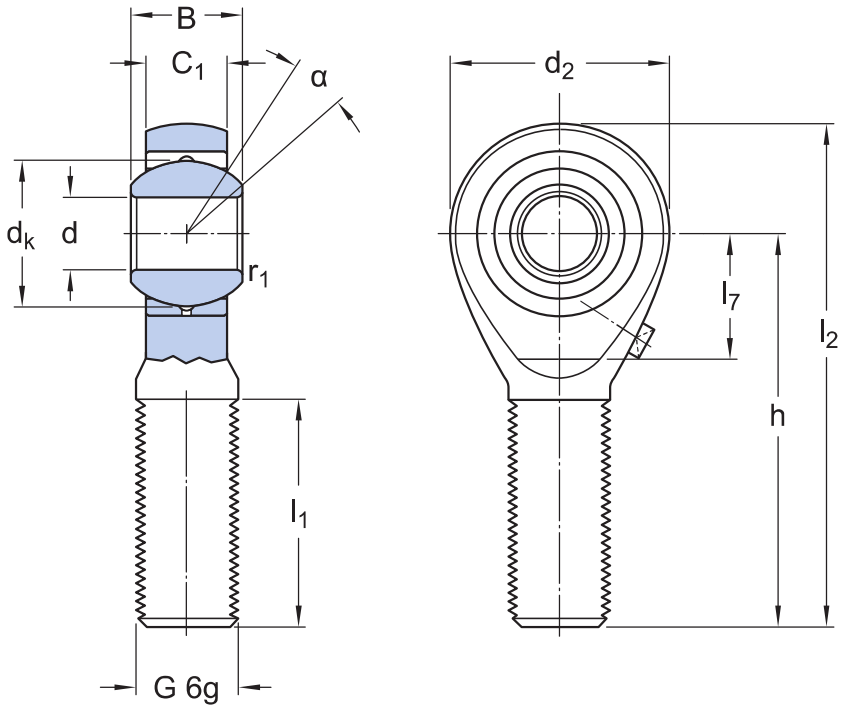

Dimensions

d	16 mm	Bore diameter
d_2	max. 43 mm	Diameter head
B	21 mm	Width inner ring
G	M 16	Thread
C_1	max. 15.5 mm	Width head
h	66 mm	Height shank end face - centre rod end eye
α	15 °	Angle of tilt
d_k	28.575 mm	Raceway diameter inner ring
l_1	min. 37 mm	Length thread

l_2	max. 89 mm	Length (height) housing
r_1	min. 0.3 mm	Chamfer dimension bore

Calculation data

Basic dynamic load rating	C	21.6 kN
Basic static load rating	C_0	23.2 kN
Specific dynamic load factor	K	50 N/mm^2
Material constant	K_M	330

Tolerances and clearances

- General bearing specifications

More Information

Product details

- Rod ends bearings requiring maintenance
- Maintenance-free rod ends
- General rod end specifications
- Temperature limits

Engineering information

- Principles of selection

Tools

- SKF Product select

Terms of use

By accessing and using this website / app owned and published by AB SKF (publ.) (556007-3495 · Gothenburg) (“SKF”), you agree to the following terms and conditions:

Warranty Disclaimer and Limitation of Liability

Although every care has been taken to assure the accuracy of the information on this website / app, SKF provides this information "AS IS" and DISCLAIMS ALL WARRANTIES, EXPRESS OR IMPLIED, INCLUDING, BUT NOT LIMITED TO, IMPLIED WARRANTIES OF MERCHANTABILITY AND FITNESS FOR A PARTICULAR PURPOSE. You acknowledge that your use of this website / app is at your sole risk, that you assume full responsibility for all costs associated with use of this website / app, and that SKF shall not be liable for any direct, incidental, consequential, or indirect damages of any kind arising out of your access to, or use of the information or software made available on this website / app.

Any warranties and representations in this website / app for SKF products or services that you purchase or use will be subject to the agreed upon terms and conditions in the contract for such product or service.

Further, for non-SKF websites / apps that are referenced in our website / app or where a hyperlink appears, SKF makes no warranties concerning the accuracy or reliability of the information in these websites / apps and assumes no responsibility for material created or published by third parties contained therein. In addition, SKF does not warrant that this website / app or these other linked websites / apps are free from viruses or other harmful elements.

Third Party Services

When viewing YouTube content via the SKF website(s) (i.e. using YouTube API Services), you agree to be bound by the YouTube Terms of Service.

Copyright

Copyright in this website / app copyright of the information and software made available on this website / app rest with SKF or its licensors. All rights are reserved. All licensed material will reference the licensor that has granted SKF the right to use the material. The information and software made available on this website / app may not be reproduced, duplicated, copied, transferred, distributed, stored, modified, downloaded or otherwise exploited for any commercial use without the prior written approval of SKF. However, it may be reproduced, stored and downloaded for use by individuals without prior written approval of SKF. Under no circumstances may this information or software be supplied to third parties.

This website /app includes certain images used under license from Shutterstock, Inc.

Trademarks and Patents

All trademarks, brand names, and corporate logos displayed on the website / app are the property of SKF or its licensors, and may not be used in any way without prior written approval by SKF. All licensed trademarks published on this website / app reference the licensor that has granted SKF the right to use the trademark. Access to this website / app does not grant to the user any license under any patents owned by or licensed to SKF.

Changes

SKF reserves the right to make changes or additions to this website / app at any time.