Product datasheet
Characteristics

XY2CEDA190

Dual e-stop rope pull switch - 2x(1NC+1NO) - Pg13.5 - flush pb



Main

Range of product	Preventa XY2
Product or component type	Dual emergency stop rope pull switch
Device short name	XY2CED
Housing colour	Red RAL 3000
Overvoltage category	Class I conforming to EN/IEC 61140

Complementary

Local signalling	Without pilot light
Number of cables	2
Trigger cable maximum length	2 x 100 m 2 x 100 m
Bellow material	Nitril
Body material	Zamak
Cover material	Stainless steel
Reset	By flush push-button
Contacts type and composition	2 x (1 NC + 1 NO)
Contacts operation	Slow-break
Trigger cable anchor point	RH and LH sides
Connections - terminals	Screw clamp terminal 1 x 0.5...2 x 1.5 mm²
Tightening torque	0.8...1.2 N.m
Cable entry number	3 plain hole for Pg 13.5 or ISO M20 cable gland
Safety level	Can reach category 4 with the appropriate monitoring system and correctly wired conforming to EN/ISO 13849-1 Can reach PL = e with the appropriate monitoring system and correctly wired conforming to EN/ISO 13849-1 Can reach SIL 3 with the appropriate monitoring system and correctly wired conforming to EN/IEC 61508
Safety reliability data	B10d = 300000 with value given for a life time of 20 years limited by mechanical or contact wear conforming to IEC 60947-5-5
Marking	CE
Mechanical durability	60000 cycles
Distance between cable supports	> 3...< 5 m
[Ie] rated operational current	3 A at 240 V AC-15, A300 conforming to EN/IEC 60947-5-1 appendix A 0.27 A at 250 V DC-13, Q300 conforming to EN/IEC 60947-5-1 appendix A
[Ithe] conventional enclosed thermal current	10 A
[Ui] rated insulation voltage	500 V (degree of pollution: 3) conforming to EN/IEC 60947-1 300 V (degree of pollution: conforming to UL 508 300 V (degree of pollution: conforming to CSA C22.2 No 14
[Uimp] rated impulse withstand voltage	6 kV conforming to EN/IEC 60947-1
Positive opening	With conforming to EN/IEC 60947-5-1
Resistance across terminals	<= 25 MOhm conforming to EN/IEC 60255-7 category 3
Short circuit protection	10 A by gG cartridge fuse conforming to EN/IEC 60269

The information provided in this documentation contains general descriptions and/or technical characteristics of the performance of the products contained herein.
This documentation is not intended as a substitute for and is not to be used for determining suitability or reliability of these products for specific user applications.
It is the duty of any such user or integrator to perform the appropriate and complete risk analysis, evaluation and testing of the products with respect to the relevant specific application or use thereof.
Neither Schneider Electric Industries SAS nor any of its affiliates or subsidiaries shall be responsible or liable for misuse of the information contained herein.

Terminals description ISO n°1	(13-14)NO (21-22)NC
Product weight	1.9 kg

Environment

standards	EN/IEC 60204-1 EN/IEC 60947-5-1 EN/IEC 60947-5-5 EN/ISO 13850 UL 508 Machinery directive 2006/42/EC CSA C22.2 No 14 Work equipment directive 2009/104/EC
product certifications	UL for category NISD emergency stop devices CSA CCC EAC
protective treatment	TC
ambient air temperature for operation	-25...70 °C
ambient air temperature for storage	-40...70 °C
vibration resistance	10 gn (f = 10...300 Hz) conforming to EN/IEC 60068-2-6
shock resistance	50 gn for 11 ms conforming to EN/IEC 60068-2-27
IP degree of protection	IP66 for conforming to IEC 60529

Offer Sustainability

Sustainable offer status	Green Premium product
RoHS (date code: YYWW)	Compliant - since 1532 - Schneider Electric declaration of conformity
REACh	Reference not containing SVHC above the threshold
Product environmental profile	Available
Product end of life instructions	Need no specific recycling operations

Dimensions

Without Tensioner

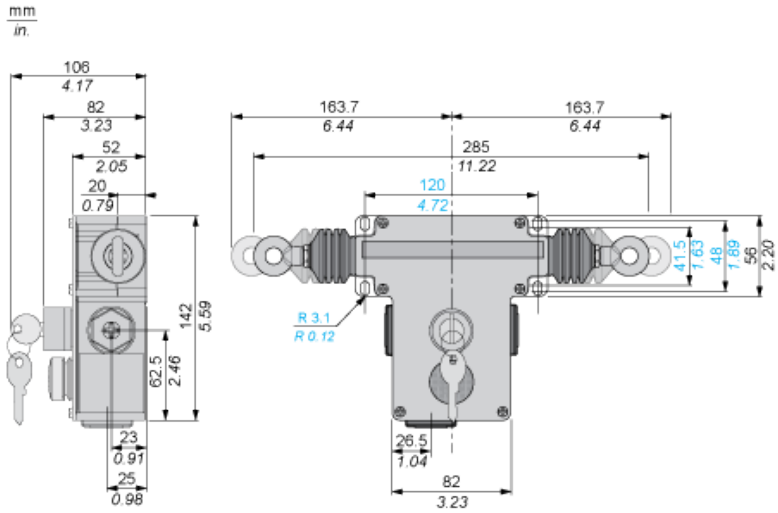

With Tensioners

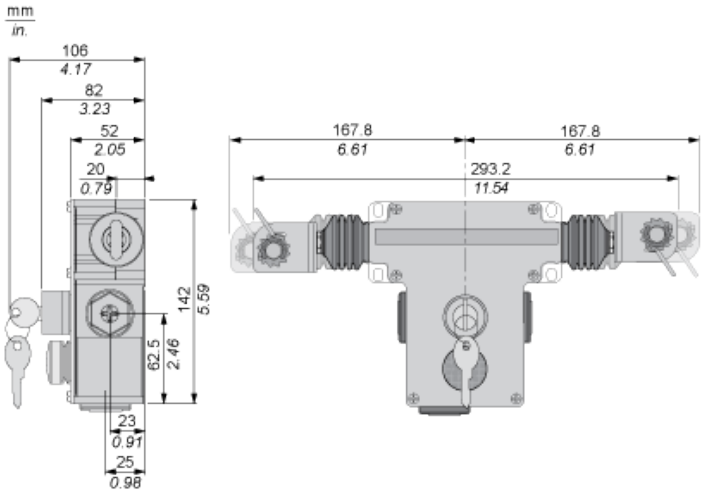

Electrical Curves

AC Supply 50/60 Hz. Inductive Circuit

2-pole Contact Block

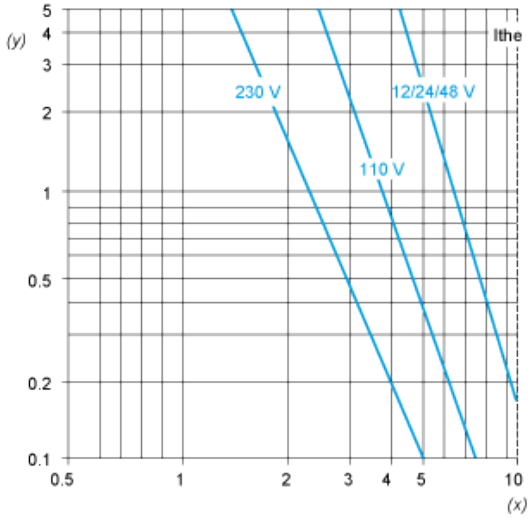

(y) Millions of operating cycles

(x) Current in A

DC Supply. Power Broken in W for 1 Million Operating Cycles. Inductive Circuit

Voltage	V	24	48	120
	W	13	9	7

Mounting and Clearance

Adjustment Values (With End Spring)

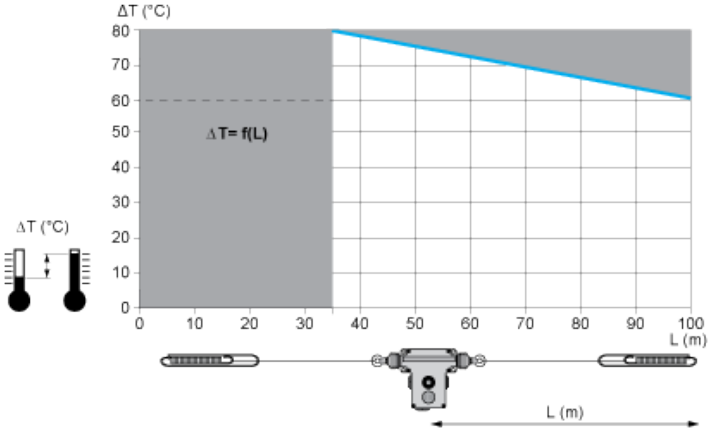

In grey : Prohibited zone