BF115T4A46060

FOUR-POLE CONTACTOR, IEC OPERATING CURRENT ITH (AC1) = 160A, AC COIL 60HZ, 460VAC



Product designation			Power contactor
Product type designation			BF115
Contact characteristics			
Number of poles		Nr.	4
Rated insulation voltage Ui IEC/EN		V	1000
Rated impulse withstand voltage Uimp		kV	8
Operational frequency			
	min	Hz	25
	max	Hz	400
IEC Conventional free air thermal current Ith		A	160
Operational current Ie			
	AC-1 (≤40°C)	A	160
	AC-1 (≤55°C)	A	130
	AC-1 (≤70°C)	A	115
	AC-3 (≤440V ≤55°C)	A	115
	AC-4 (400V)	A	54
IEC max current Ie in DC1 with L/R ≤ 1ms with 1 poles in series			
	≤24V	A	160
	48V	A	160
	75V	A	120
	110V	A	10
	220V	A	–
IEC max current Ie in DC1 with L/R ≤ 1ms with 2 poles in series			
	≤24V	A	160
	48V	A	160
	75V	A	160
	110V	A	130
	220V	A	14
IEC max current Ie in DC1 with L/R ≤ 1ms with 3 poles in series			
	≤24V	A	160
	48V	A	160
	75V	A	160
	110V	A	140
	220V	A	145
IEC max current Ie in DC1 with L/R ≤ 1ms with 4 poles in series			
	≤24V	A	160
	48V	A	160
	75V	A	160
	110V	A	160
	220V	A	160
IEC max current Ie in DC3-DC5 with L/R ≤ 15ms with 1 poles in series			
	≤24V	A	160
	48V	A	50
	75V	A	40
	110V	A	6

The characteristics described in this document are subject to updates or modifications at any time. The descriptions, technical and functional information, illustrations and instructions in this brochure are purely illustrative, and are consequently not contractually binding

	220V	A	–
IEC max current Ie in DC3-DC5 with L/R ≤ 15ms with 2 poles in series			
	≤24V	A	160
	48V	A	72
	75V	A	65
	110V	A	65
	220V	A	7
IEC max current Ie in DC3-DC5 with L/R ≤ 15ms with 3 poles in series			
	≤24V	A	160
	48V	A	150
	75V	A	100
	110V	A	100
	220V	A	92
IEC max current Ie in DC3-DC5 with L/R ≤ 15ms with 4 poles in series			
	≤24V	A	160
	48V	A	120
	75V	A	120
	110V	A	125
	220V	A	115
Short-time allowable current for 10s (IEC/EN60947-1)		A	920
Protection fuse			
	gG (IEC)	A	200
	aM (IEC)	A	125
Making capacity (RMS value)		A	1500
Breaking capacity at voltage			
	440V	A	1200
	500V	A	850
	690V	A	905
Resistance per pole (average value)		mΩ	0.45
Power dissipation per pole (average value)			
	Ith	W	11.5
	AC3	W	6.0
Tightening torque for terminals			
	min	Nm	6
	max	Nm	7
	min	lbin	4.4
	max	lbin	5.2
Tightening torque for coil terminal			
	min	Nm	0.8
	max	Nm	1
	min	lbin	0.59
	max	lbin	0.74
Conductor section			
AWG/Kcmil			
	max		2/0
Flexible w/o lug conductor section			
	min	mm²	1.5
	max	mm²	70
Flexible c/w lug conductor section			
	min	mm²	1.5
	max	mm²	70
Power terminal protection according to IEC/EN 60529			IP20 front

Mechanical features

The characteristics described in this document are subject to updates or modifications at any time. The descriptions, technical and functional information, illustrations and instructions in this brochure are purely illustrative, and are consequently not contractually binding

Operating position			
	normal		Vertical plan
	allowable		±30°
Fixing			Screw / DIN rail 35mm
Weight		g	2420
Conductor section			
AWG/kcmil conductor section			
	max		2/0
Operations			
Mechanical life		cycles	15000000
Electrical life		cycles	1200000
AC coil operating			
Rated AC voltage at 60Hz		V	460
AC operating voltage			
of 60Hz coil powered at 60Hz			
pick-up			
	min	%Us	80
	max	%Us	110
drop-out			
	min	%Us	20
	max	%Us	55
AC average coil consumption at 20°C			
of 60Hz coil powered at 60Hz			
	in-rush	VA	300
	holding	VA	20
Max cycles frequency			
Mechanical operation		cycles/h	1500
Operating times			
Average time for Us control			
in AC			
Closing NO			
	min	ms	16
	max	ms	32
Opening NO			
	min	ms	9
	max	ms	24
UL technical data			
General USE			
Contactor			
	AC current	A	165
Short-circuit protection fuse, 600V			
High fault			
	Short circuit current	kA	100
	Fuse rating	A	200
	Fuse class		J
Standard fault			
	Short circuit current	kA	10
	Fuse rating	A	250
	Fuse class		RK5
Ambient conditions			
Temperature			
Operating temperature			
	min	°C	-50

The characteristics described in this document are subject to updates or modifications at any time. The descriptions, technical and functional information, illustrations and instructions in this brochure are purely illustrative, and are consequently not contractually binding

	max	°C	70
Storage temperature			
	min	°C	-60
	max	°C	+80
Max altitude		m	3000

Dimensions

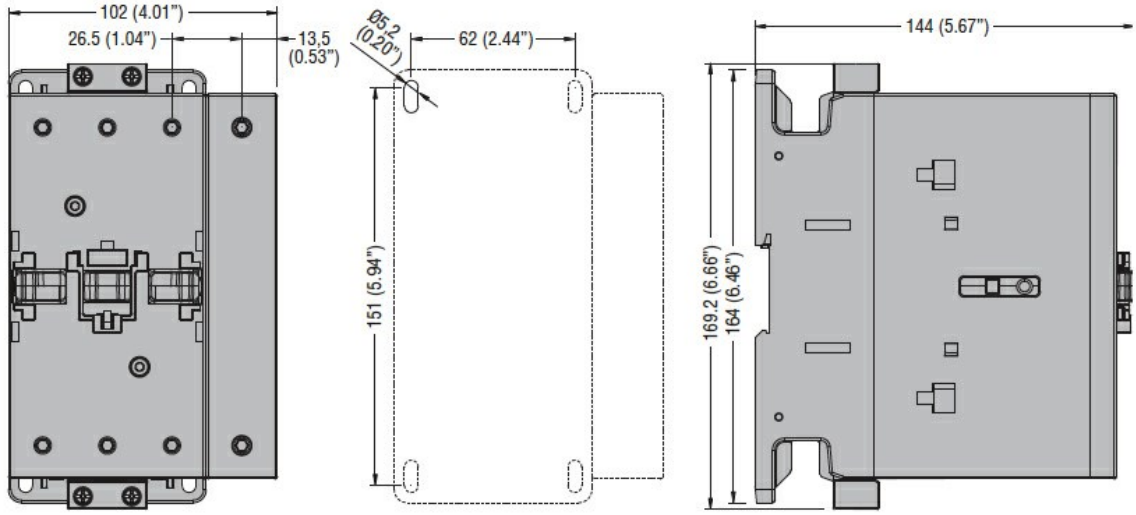

Wiring diagrams

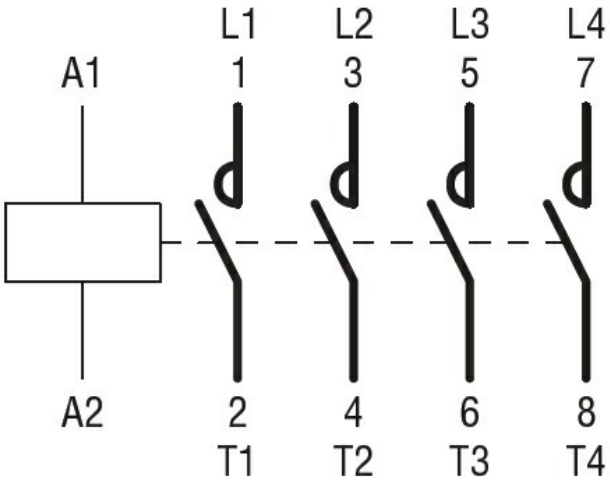

Certifications and compliance

Compliance

CSA C22.2 n° 60947-1
CSA C22.2 n° 60947-4-1
IEC/EN/BS 60947-1
IEC/EN/BS 60947-4-1
UL 60947-1
UL 60947-4-1

Certificates

CCC
cULus
EAC

ETIM classification

ETIM 8.0	EC000066 - Power contactor, AC switching

The characteristics described in this document are subject to updates or modifications at any time. The descriptions, technical and functional information, illustrations and instructions in this brochure are purely illustrative, and are consequently not contractually binding

The characteristics described in this document are subject to updates or modifications at any time. The descriptions, technical and functional information, illustrations and instructions in this brochure are purely illustrative, and are consequently not contractually binding