Inductive Sensors

BES M30MI-NOC10B-BP03
Order Code: BES0095

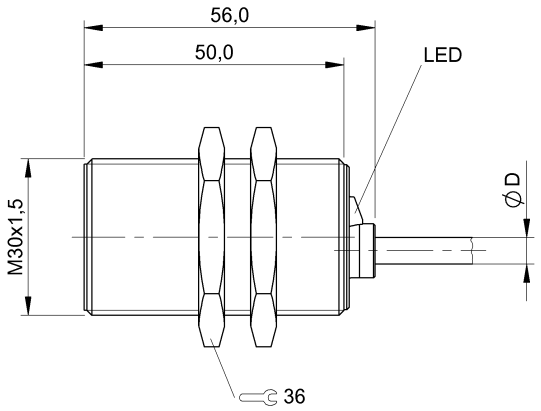

Basic features

Approval/Conformity	CE cULus EAC WEEE
Basic standard	IEC 60947-5-2
Trademark	Global

Display/Operation

Function indicator	yes
Power indicator	no

Electrical connection

Cable diameter D	4.60 mm
Cable length L	3 m
Conductor cross-section	0.34 mm²
Connection type	Cable, 3.00 m, TPU
Number of conductors	3
Polarity reversal protected	yes
Protection against device mix-ups	yes
Short-circuit protection	yes

Electrical data

Load capacitance max. at Ue	1 µF
Min. operating current Im	0 mA
No-load current Io max., damped	5 mA
No-load current Io max., undamped	10 mA
Operating voltage Ub	12...30 VDC
Output resistance Ra	33.0 kOhm + D
Protection class	II
Rated insulation voltage Ui	250 V AC
Rated operating current Ie	200 mA
Rated operating voltage Ue DC	24 V
Rated short circuit current	100 A
Ready delay tv max.	150 ms
Residual current Ir max.	20 µA
Ripple max. (% of Ue)	15 %
Switching frequency	400 Hz
Utilization category	DC -13
Voltage drop static max.	2.5 V

Environmental conditions

Ambient temperature	-25...70 °C
Contamination scale	3
EN 60068-2-27, Shock	Half-sinus, 30 g_n, 11 ms
EN 60068-2-6, Vibration	55 Hz, amplitude 1 mm, 3x30 min
IP rating	IP68

Functional safety

MTTF (40 °C)	880 a

Interface

Switching output	NPN normally closed (NC)

BES M30MI-NOC10B-BP03
Order Code: BES0095

Material

Housing material	Brass, nickel plated
Material jacket	TPU
Material sensing surface	PA 12

Mechanical data

Dimension	Ø 30 x 56 mm
Installation	for flush mounting
Size	M30x1.5
Tightening torque	70 Nm

Range/Distance

Assured operating distance Sa	8.1 mm
Hysteresis H max. (% of Sr)	15.0 %
Rated operating distance Sn	10 mm
Real switching distance sr	10 mm
Repeat accuracy max. (% of Sr)	5.0 %
Temperature drift max. (% of Sr)	10 %
Tolerance Sr	±10 %

Remarks

The sensor is functional again after the overload has been eliminated.

For more information about MTTF and B10d see MTTF / B10d Certificate

Indication of the MTTF- / B10d value does not represent a binding composition and/or life expectancy assurance; these are simply experiential values with no warranty implications. These declared values also do not extend the expiration period for defect claims or affect it in any way.

Wiring Diagrams

