LED temperature controllers | For temperature sensors with limit value (AC+DC) | Codix 564



The temperature controller Codix 564 displays temperature values in high resolution. In addition it can monitor and control 2 limit values. All current temperature sensors, such as thermocouple types B, E, J, K, N, R, S and T, as well as mV inputs, Pt100 and resistance inputs, can be connected to the device.

These fast displays set new standards when it comes to user friendliness. Their easy-to-read 14-segment LED display, easy-to-understand running help texts and a practical quick-start guide eliminate the need to wade through time-consuming full instruction manuals.

With optional analogue output.

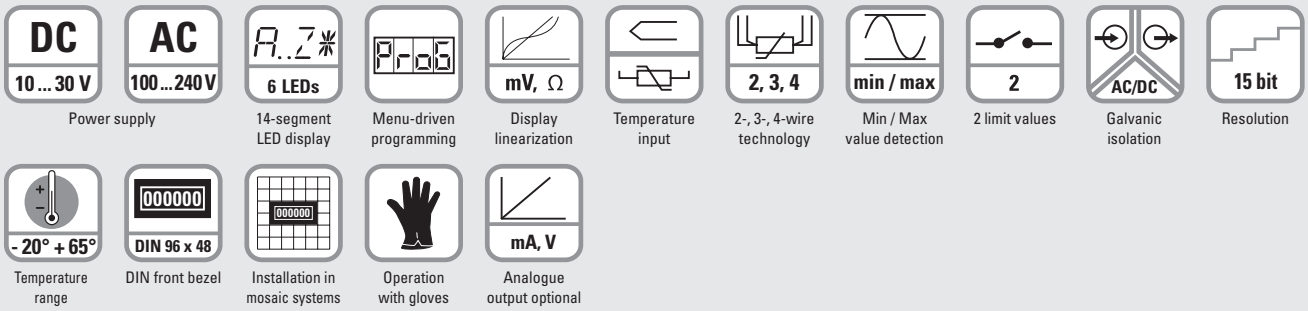

User-friendly

- Practical quick-start guide for setting the parameters and operating the device
- Help text as running text
- Easy-to-read 14-segment LED, 6-digit display, 14 mm high
- Simple programming via 4 keys on the front
- One front key as well as 2 additional inputs can be programmed for specific applications
- Characteristic curves for thermocouples and RTD permanently stored
- MIN/MAX memory function, individually resettable

Powerful

- Sampling rate of 10 readings per second
- Customised linearization via 12 control points
- 2 relay outputs (changeover contacts) for limit monitoring with hysteresis and ON/OFF delay function
- Analogue output for the current measured value, MIN-value, MAX-value
- Auxiliary sensor power supply with AC version
- Inputs and outputs galvanically isolated
- Digital filter (first-order) for smoothing display fluctuations with unstable input signals

Order code

6.564 . 0 1 0 . X 0 X
(a) (b) (c) (d)

(a) *Input type*
4 = Temperature signal input [1)]

(b) *Outputs*
0 = relays [1)]

(c) *Power supply*
0 = 100 ... 240 V AC, ± 10% [1)]
3 = 10 ... 30 V DC [1)]

(d) *Further outputs (optional)*
0 = none [1)]
9 = analogue output [1)]
(only for DC version)

Delivery specification:
– Process device
– Mounting clip
– Gasket
– Instruction manual, multilingual
– 1 sheet of self-adhesive symbols
– Quick-start guide

[1)] Stock types

Practical quick-start guide for setting the parameters and operating the device.

The guide can be affixed directly to the front of the unit and can be removed and re-applied as required.



Accessories	Dimensions in mm [inch]		Order-No.
Mounting frame with cut-out 92 x 45 [3.62 x 1.77]	For snap-on mounting on 35 [1.38] top-hat DIN rail, for counters 96 x 48 [3.74 x 1.89]	grey	**G300005**

Suitable gaskets as well as further accessories can be found in the accessories section or in the accessories area of our website at: www.kuebler.com/accessories.

© Fritz Kübler GmbH, subject to errors and changes. 03/2014

LED temperature controllers | For temperature sensors with limit value (AC+DC) | Codix 564

Technical data

General technical data

Display	6-digit, 14 segment LED
Digit height	14 mm [0.55“]
Display range	-199999 … 999999, with leading zero blanking
Data retention	> 10 years, EEPROM
Operation	5 keys
Operating temperature (non-condensing)	-20°C ... +65°C [-4°F ... +149°F]
Storage temperature	-25°C ... +75°C [-13°F ... +167°F]
Relative humidity (non-condensing)	R.H. 93 % at +40°C [+104°F]
Altitude	up to 2000 m [6562‘]

Electrical characteristics

Power supply	AC supply	100 ... 240 V AC / max. 9 VA, 50 / 60 Hz, tolerance ±10% ext. fuse protection: T 0.1 A
	DC supply	10 ... 30 V DC / max. 3.8 W with galvanic isolation and reverse polarity protection ext. fuse protection: T 0.4 A
Mains hum suppression (programmable)		50 Hz or 60 Hz
Sensor power supply	AC supply	24 V DC ±15 %, 30 mA
EMC	Emitted interference	EN 55011 class B
	Immunity to interference	EN 61000-6-2 with shielded signal and control cables
Device safety	Designed to	EN 61010 part 1
	Protection class	2 (front side)
	Application area	Pollution level 2
	Overvoltage category	II
UL approval		File No.: E128604

Mechanical characteristics

Housing		Panel mount housing to DIN 43700 RAL 7021
Dimensions		96 x 48 x 102 mm [3.78 x 1.89 x 4.02“]
Panel cut-out		92 +0.8 x 45 +0.6 mm [3.62 +0.032 x 1.77 +0.024“]
Installation depth		approx. 92 mm [3.62“] incl. terminals
Weight		approx. 180 g [6.34 oz]
	with analogue output	200 g [7.06 oz]
Protection		IP65 (front side)
Housing material		Polycarbonate UL94 V-2
Vibration resistance	acc. to EN 60068-2-6	10 - 55 Hz / 1 mm / XYZ 30 min in each direction
Shock resistance	acc. to EN 60068-2-27	100G / XYZ 3 times in each direction
	acc. to EN 60068-2-29	10G / 6 ms / XYZ 2000 times in each direction

Connections

Power supply and outputs	Plug-in screw terminal, 8-pin, RM 5.00, core ø max. 2.5 mm² [AWG 13]
Signal and control inputs	Plug-in screw terminal, 9-pin, RM 3.50, core ø max. 1.5 mm² [AWG 15]

Measuring signal inputs

Sampling rate	10 readings/sec
Temperature drift	< 100 ppm/K

Input Thermocouple

thermocouple:	range:	accuracy at 23°C [73.4°F]:
type B	+250°C ... 1820°C [+482°F ... 3308°F]	typ. 1.0°C, max. 2.0°C
E	-200°C ... +1000°C [-328°F ... +1832°F]	typ. 0.2°C, max. 0.5°C
J	-210°C ... +1200°C [-346°F ... +2192°F]	typ. 0.2°C, max. 0.5°C
K	-200°C ... 499.9°C [-328°F ... +931,82°F]	typ. 0.6°C, max. 1.0°C
	-500°C ... +1372°C [-868°F ... 2502°F]	typ. 0.3°C, max. 0.5°C
N	-200°C ... +1300°C [-328°F ... 2372°F]	typ. 0.3°C, max. 0.7°C
R	-50°C ... +1768°C [-58°F ... +3214°F]	typ. 1.0°C, max. 2.0°C
S	-50°C ... +1768°C [-58°F ... +3214°F]	typ. 1.0°C, max. 2.0°C
T	-200°C ... +400°C [-328°F ... +752°F]	typ. 0.2°C, max. 0.5°C

Resolution J, K, T, E, N	1 or 0.1°C/°F
Resolution S, R, B	1°C/°F
Reference point	internal or external constant
Reference point accuracy	≤ ±1°C

Input mV

Measuring range	± 105 mV (resolution ±15 bit)
Measuring accuracy at 23°C [73.4°F] (% of range)	typ. 0.02 / max. ≤ 0.05
Input resistance	> 2 MΩ

Input Pt100

Measuring range	-200°C … +850°C [-328°F ... +1562°F]
Resolution	1 or 0.1°C / °F
Measuring accuracy at 23°C [73.4°F]	typ. 0.3°C, max. ≤ 0.6°C
Measuring current	200 µA
Connection	2-, 3-, 4-wire
Lead wire resistance	max. 25 Ω per wire

Input 500 Ω

Measuring range	0 ... 525 Ω (resolution ±15 bit)
Measuring accuracy at 23°C [73.4°F]	typ. 0.1 Ω, max. ≤ 0.2 Ω
Measuring current	200 µA
Connection	2-, 3-, 4-wire
Lead wire resistance	max. 25 Ω per wire

© Fritz Kübler GmbH, subject to errors and changes. 03/2014

LED temperature controllers | For temperature sensors with limit value (AC+DC) | Codix 564

Alarm outputs		
Relays		changeover contacts
Switching voltage	max. min.	250 V AC / 125 V DC 5 V AC / 5 V DC
Switching current	max. min.	5 A AC / 5 A DC 10 mA DC
Switching capacity	max.	1250 VA / 150 W
Pull-in time		approx. 10 ms

Control inputs MPI 1 / MPI 2		
Quantity		2 optocouplers
Function		programmable
Switching levels	LOW HIGH	< 2 V > 4 V (max. 30 V)
Pulse length		> 100 ms

Analogue output (optional - only for DC version)		
Output ranges		0 (4) ... 20 mA / 0 (2) ... 10 V
Load	current output voltage output	≤ 500 Ω ≥ 2000 Ω
Resolution		15 bit
Update time (basic device measuring rate)		100 ms
Temperature drift		≤ 100 ppm/K
Accuracy		± 0.1% of the output range high value
Output ripple		≤ 10 mV
Isolation voltage		500 V AC for 1 minute or 1 kV DC for 1 second

Terminal assignment

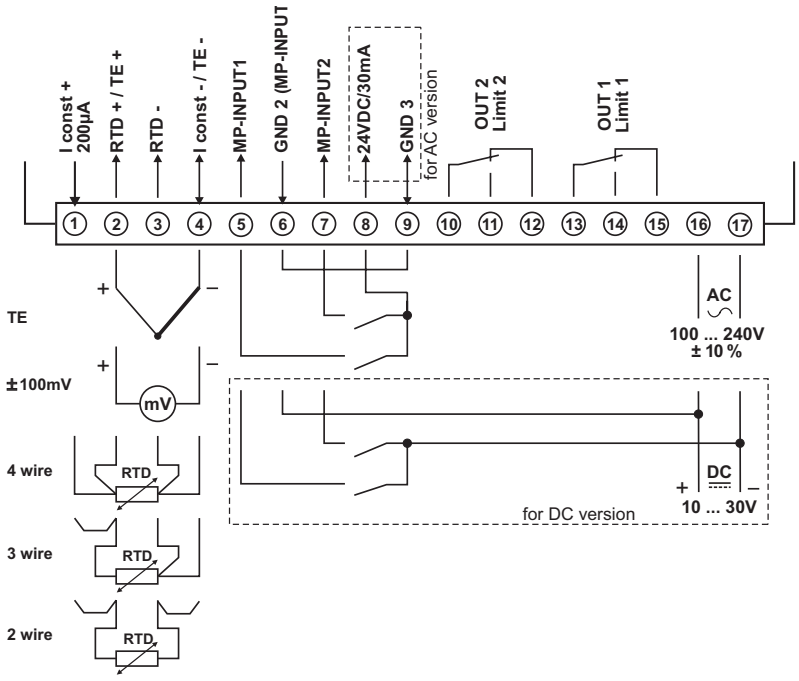

Rear side view

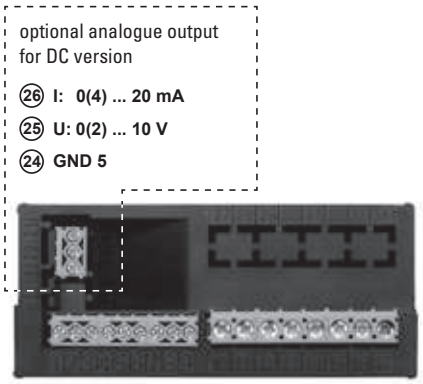

© Fritz Kübler GmbH, subject to errors and changes. 03/2014

LED temperature controllers | For temperature sensors with limit value (AC+DC) | Codix 564

Block diagram

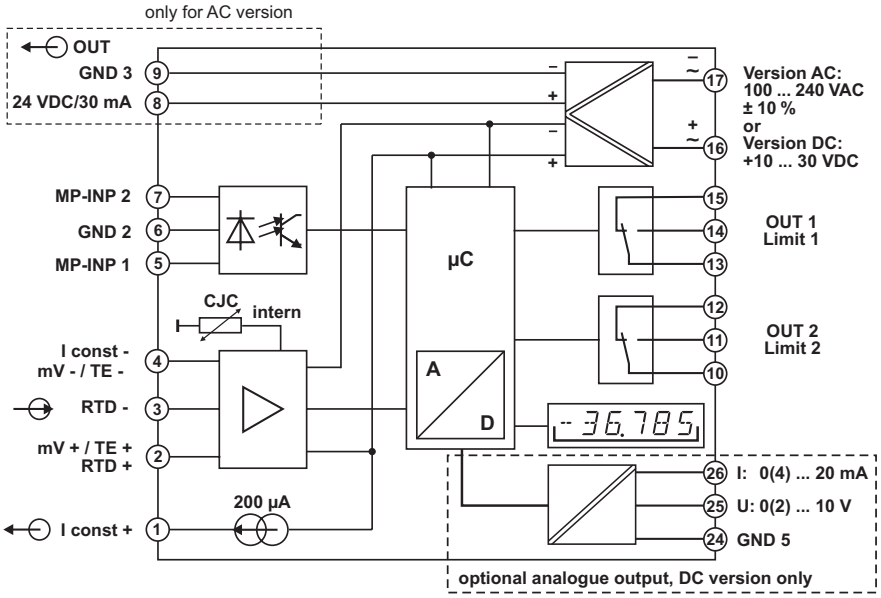

Dimensions

Dimensions in mm [inch]

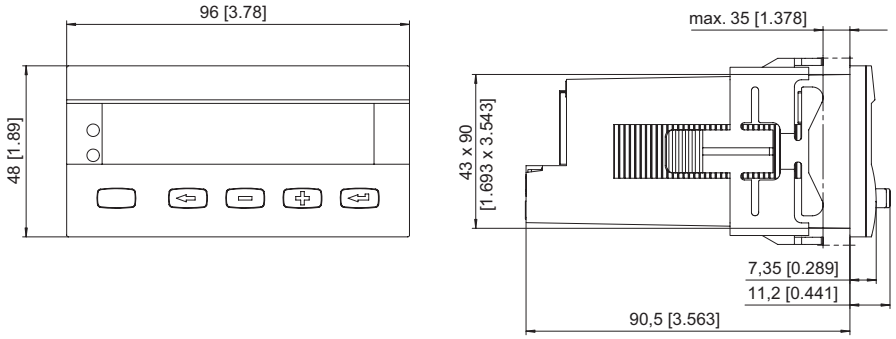

Panel cut-out
92 $^{+0.8}$ x 45 $^{+0.6}$
[3.62 $^{+0.032}$ x 1.77 $^{+0.024}$]

© Fritz Kübler GmbH, subject to errors and changes. 03/2014