Brand of NTN corporation

Technical data

UCP315

Bearing units



Grey cast housing, radial insert ball bearing with socket set screws,seal with slinger

KIT CONTENT

UC315G2, P315

VISUAL (S)

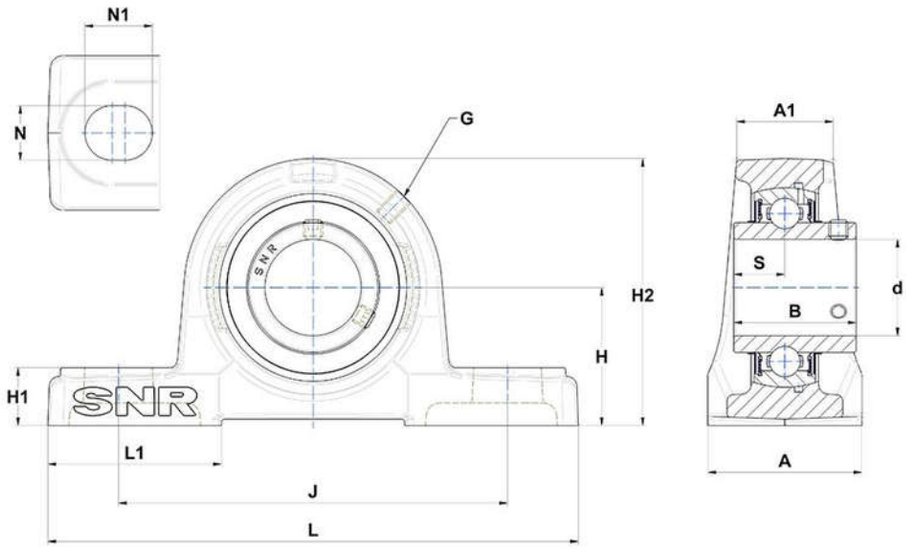

PRODUCT DEFINITION

Brand	SNR
A - Housing width	100 mm
A1 - Housing top width	63 mm
B - Width of Inner Ring	82 mm
d - Shaft diameter	75 mm
G - Grease fitting	M10x1

PRODUCT DEFINITION	
H - Distance mounting base to centerline spheric. seating diam.	100 mm
H1 - Housing foot height	35 mm
H2 - Housing height	198 mm
J - Mounting holes distance	290 mm
L - Housing length	380 mm
L1 - Housing foot length	110 mm
N - Mounting hole dimension	27 mm
N1 - Mounting hole length	40 mm
S - Distance front side/bearing centre	32 mm

PRODUCT PERFORMANCE	
C - Dynamic load rating	113360000 mN
C0 - Static load rating	76800000 mN
Operating temperature min.	253,15 °K
Operating temperature max.	373,15 °K

OTHER FEATURES	
Mass	14,43 kg
Recommended tightening torque for set screw	42 N-m