Product data sheet
Characteristics

XMLR016G0T25
Pressure sensors XMLR 16bar - G 1/4 - 24VDC - 4..20 mA - M12



Main

Range of product	OsiSense XM
Product or component type	Electronic pressure sensors
Pressure switch type of operation	Pressure transmitter
Device short name	XMLR
Pressure sensor size	16 bar 232 psi 1.6 MPa
Maximum permissible accidental pressure	62 bar 900 psi 6.2 MPa
Destruction pressure	900 psi 62 bar 6.2 MPa
Controlled fluid	Refrigeration fluid (-20...80 °C) Hydraulic oil (-20...80 °C) Air (-20...80 °C) Fresh water (0...80 °C)
Fluid connection type	G 1/4 (female) conforming to DIN 3852-Y
[Us] rated supply voltage	24 V DC SELV, voltage limits: 17...33 V

Complementary

Current consumption	<= 50 mA
Electrical connection	4 pins M12 male connector
Type of output signal	Analog
Analogue output function	4...20 mA
Materials in contact with fluid	Ceramic Fluorocarbon FKM (Viton) 316L stainless steel
Front material	Polyester
Housing material	Polyacrylamide 316L stainless steel
Operating position	Any position, but disposals can falsified the measurement in case of upside down mounting
Protection type	Overload protection Overvoltage protection Reverse polarity Short-circuit protection
Response time on output	<= 10 ms for analog output
Display type	4 digits 7 segments
Display response time type	Slow 600 ms Normal 200 ms Fast 50 ms
Delay first up	<= 300 ms
Overall accuracy	<= 1 % of the measuring range
Linearity error on analogue output	<= 0.5 % of the measuring range
Hysteresis on analogue output	<= 0.2 % of the measuring range
Measurement accuracy on switching output	<= 0.6 % of the measuring range
Repeat accuracy	<= 0.2 % of the measuring range
Drift of the sensitivity	+/- 0.03 % of measuring range/°C
Drift of the zero point	+/- 0.1 % of measuring range/°C
Display accuracy	<= 1 % of the measuring range

The information provided in this documentation contains general descriptions and/or technical characteristics of the performance of the products contained herein.
This documentation is not intended as a substitute for and is not to be used for determining suitability or reliability of these products for specific user applications.
It is the duty of any such user or integrator to perform the appropriate and complete risk analysis, evaluation and testing of the products with respect to the relevant specific application or use thereof.
Neither Schneider Electric Industries SAS nor any of its affiliates or subsidiaries shall be responsible or liable for misuse of the information contained herein.

Mechanical durability	>= 10000000 cycles
Depth	42 mm
Height	93 mm
Width	41 mm
Product weight	0.19 kg
[Uimp] rated impulse withstand voltage	0.5 kV DC
Electromagnetic compatibility	Electrostatic discharge immunity test - test level 8 kV air, 4 kV contact conforming to EN/IEC 61000-4-2 Electrical fast transient/burst immunity test - test level 2 kV conforming to EN/IEC 61000-4-4 Surge immunity test - test level 1 kV conforming to EN/IEC 61000-4-5 Immunity to conducted RF disturbances - test level 10 V (0.15...80 MHz) conforming to EN/IEC 61000-4-6 Susceptibility to electromagnetic fields - test level 10 V/m (80...2000 MHz) conforming to EN/IEC 61000-4-3

Environment

Marking	CE
Product certifications	CULus EAC
Standards	UL 61010-1 EN/IEC 61326-2-3
Ambient air temperature for operation	-20...80 °C
Ambient air temperature for storage	-40...80 °C
IP degree of protection	IP67 conforming to EN/IEC 60529 IP65 conforming to EN/IEC 60529
Vibration resistance	20 gn (f = 10...2000 Hz) conforming to EN/IEC 60068-2-6
Shock resistance	50 gn conforming to EN/IEC 60068-2-27

Offer Sustainability

Sustainable offer status	Not Green Premium product
RoHS (date code: YYWW)	Compliant - since 1351 - Schneider Electric declaration of conformity
REACh	Reference not containing SVHC above the threshold

Dimensions

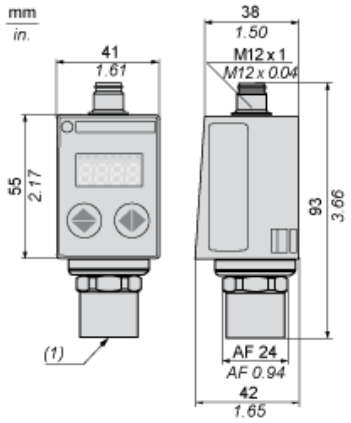

(1) Fluid entry: G 1/4 A female

Connections and Schema

Connector Wiring

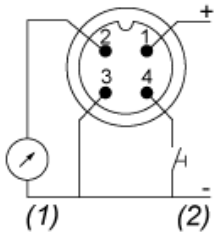

(1) I Out or V Out
(2) Test Input

Analogue Output Description

Analogue Output Signal

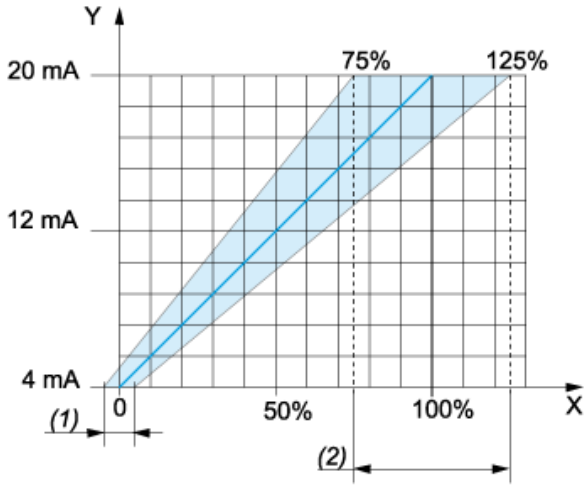

X : Pressure
Y : Analogue output signal
(1) An offset of +/-5% of nominal pressure can be compensated (with Cof Configuration menu. Cof: Offset Compensation)
(2) The analogue curve can be adjusted from -25% to +25% of nominal pressure (with AEP Configuration menu. AEP: analogue end point).