UNISTRUT

A PART OF atkore INTERNATIONAL

Product Data Sheet

P1019-P1020 Flat Fitting

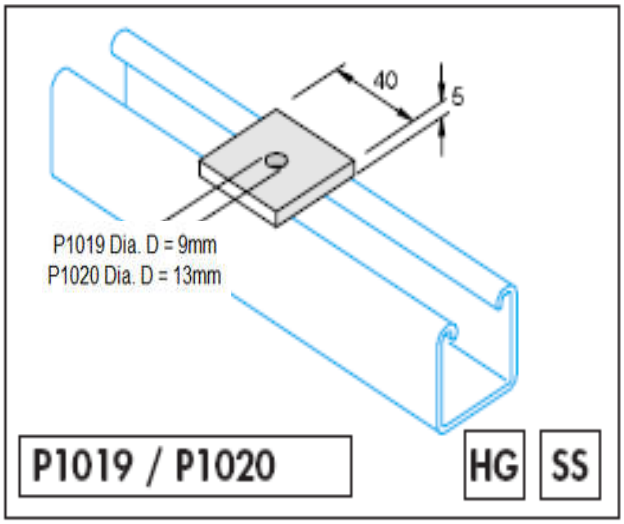

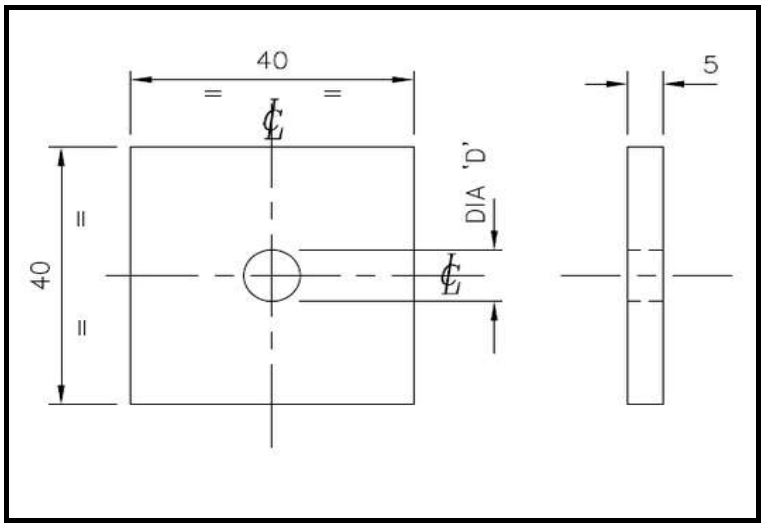

P1019 / P1020 Test Results.

Part Number	Torque required	Torque achieved		Pass	Fail	Quantity Tested	Comment
P1019	28Nm	68Nm		PASS		1 Pair	No evidence of cracking, breakage, or any failure mode.
P1020	70Nm	140Nm		PASS		1 Pair	No evidence of cracking, breakage, or any failure mode.

Material:

P1019 / P1020	Mild Steel to BS EN 10149-2-S315MC or Asian spec. Q345 grade.
P1019SS / P1020SS	S/Steel BS EN 10088-2-1.4404+1D (S316L)

Finishes:

P1019/ P1020	Hot Dip Galvanized - Process in accordance with BS EN ISO 1461
P1019SS/P1020SS	S/Steel - Self Colour to BS EN 10088-2-1.4404+1D (S316L)

Part Weight:- 0.058 Kg
Box Weight:- 5.8Kg
No. Per Box:- 100