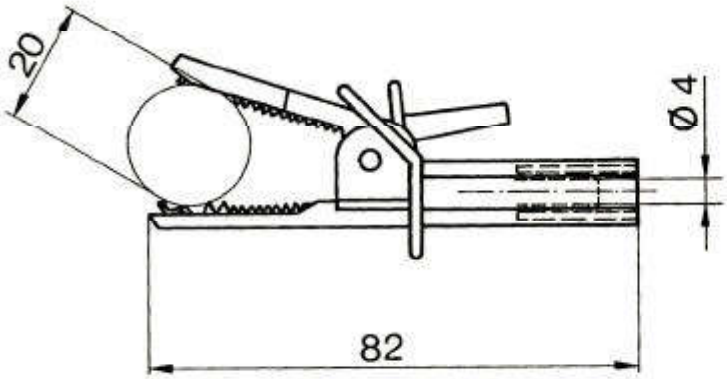

Crocodile-clip
- insulated
- socket ø 4 mm

order no. SAK 2492 / ..(colour)

- contact part material	brass
- contact part	**nickel-plated**
- insulation	PA 6.6 (Polyamid)
- gripping width	ø 9,5 mm
colours:	see table

RS433-2597 = SET 3227
Contains:-
SAK 2492 (Page 1)
SET 2040 (Page 2)
PRUF 2013 (Page 2)
MSFK 30/2.5/- (Page 3)



General information		Technical data				
order no.	colours	terminal	transition resistance	rated voltage	rated current	operating temperature
SAK 2492 / ..(colour) contact part nickel-plated	black red	socket	< 10 mΩ	600 V CAT III	12 A	- 25 °C ... + 80 °C

SCHÜTZINGER
Labor - Schütz GmbH

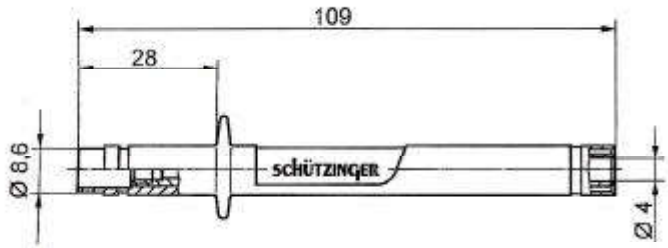



PRÜF 2013

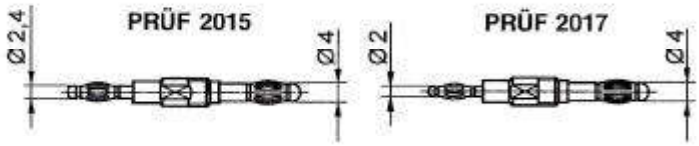

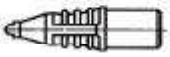

SSK 2002

Test probe set

with axial socket. It is possible to fit several probe insets into this test probe.

the Probe insets PRÜF 2013, PRÜF 2015, PRÜF 2017 and the Tip-protection-head SSK 2002 are included in the set!

order no. SET 2040 / ..(colour)

contact parts	**nickel-plated**
insulation	PA 6.6 (Polyamid)
colours:	see table

description of accessories

Probe inset PRÜF 2013

- both ends of this inset can be used individualy. One end has a 5 mm spring loaded steel tip, the other end a rigid steel tip with 4 mm lamella-basket

Probe inset PRÜF 2015

- this inset provides a 2.4 mm lamella-basket plug

Probe inset PRÜF 2017

- this inset provides a 2.4 mm lamella-basket plug

Tip protection head SSK 2002 / .. (colour)

- for IC with 2.5 mm raster (DIL)
- it can be used as a tool to screw the insets into the probe

General information			Technical data				
order no.		colours	terminal	transition resistance	rated voltage	rated current	operating temperature (Insulation -25 °C ... + 90 °C)
SET 2040 / .. (colour) contact parts nickel-plated	set	black red	socket	10 mΩ	1000 V CAT II	32 A	- 25 °C ... + 90 °C
PRÜF 2013 contact parts nickel-plated	spare part	—	—	5 mΩ	1000 V CAT II	32 A	- 40 °C ... + 110 °C
PRÜF 2015 contact parts nickel-plated	spare part	—	—	5 mΩ	1000 V CAT II	12 A	- 40 °C ... + 110 °C
PRÜF 2017 contact parts nickel-plated	spare part	—	—	5 mΩ	1000 V CAT II	10 A	- 40 °C ... + 110 °C
SSK 2002 / ..(colour)	spare part	black red	— —	— —	— —	— —	- 25 °C ... + 90 °C

other colours and platings on request

according to IEC 1010



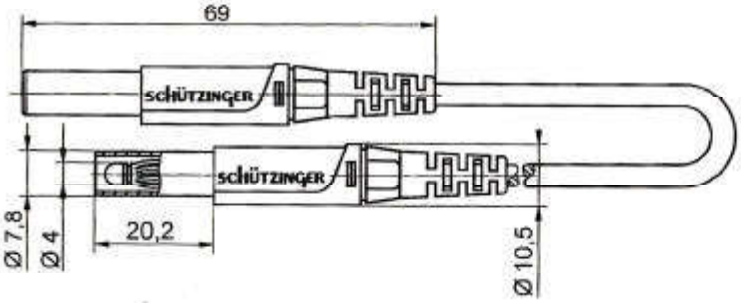

Measuring lead
- 2 safety lamella-basket plugs crimped on highly flexible lead. In accordance to IEC 1010, BG tested and awarded the Design Award IF 95.

order no. MSFK 30 / 2,5 / ..(length) / ..(colour)

- lead	2.5 mm² with tension relief PVC-double-insulated
- contact parts	**nickel-plated**
- sleeves	PA 6.6 (Polyamid)
colours	see table

order no. MSFK 31 / 2,5 / ..(length) / ..(colour)

- as above	
- contact parts	**gold-plated**
colours	see table

General information			Technical data				
order no.	lengths	colours	lead	transition resistance	rated voltage	rated current	operating temperature
MSFK 30 / 2,5 / ..(length) / ..(colour) contact parts nickel-plated	25 cm 50 cm 100 cm 150 cm 200 cm	black red	PVC 2.5 mm²	5 mΩ 9 mΩ 17 mΩ 25 mΩ 35 mΩ	1000 V CAT II	32 A	- 10 °C ... + 80 °C

other lengths, platings and wire square sections and Silikon-leads on request