7312 BECBJ

Popular item
SKF Explorer

Dimensions

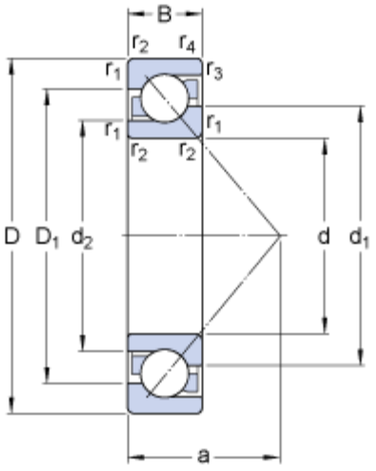

d		60	mm
D		130	mm
B		31	mm
d_1	≈	87.25	mm
d_2	≈	72.6	mm
D_1	≈	104.8	mm
a		55	mm
$r_{1,2}$	min.	2.1	mm
$r_{3,4}$	min.	1.1	mm

Abutment dimensions

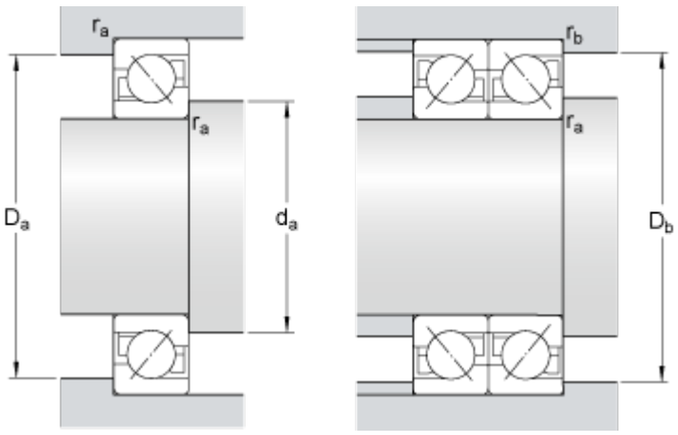

d_a	min.	72	mm
D_a	max.	118	mm
D_b	max.	123	mm
r_a	max.	2	mm
r_b	max.	1	mm

Calculation data

Basic dynamic load rating	C	104	kN
Basic static load rating	C_0	76.5	kN
Fatigue load limit	P_u	3.2	kN
Reference speed		6300	r/min
Limiting speed		6700	r/min
Calculation factor	A	0.0846	
Calculation factor	k_r	0.1	
Calculation factor	e	1.14	

Single bearing or bearing pair arranged in tandem

Calculation factor	X	0.35	

Calculation factor	Y_0	0.26
Calculation factor	Y_2	0.57

Bearing pair arranged back-to-back or face-to-face

Calculation factor	X	0.57
Calculation factor	Y_0	0.52
Calculation factor	Y_1	0.55
Calculation factor	Y_2	0.93

Mass

Mass bearing	1.75	kg