Brand of NTN corporation

Technical data

UKFC208H

Bearing units



Grey cast housing, radial insert ball bearing with adapter sleeve,seal with slinger

KIT CONTENT

UK208G2H, FC208

VISUAL (S)

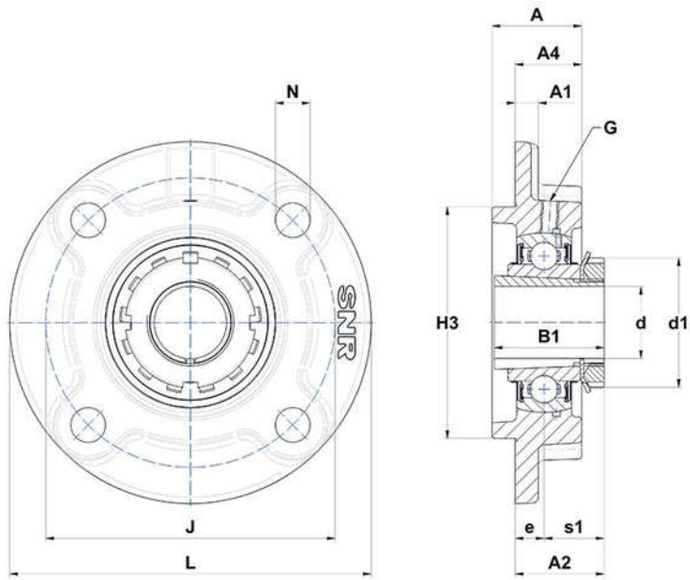

PRODUCT DEFINITION

Brand	SNR
A - Housing height	36 mm
A1 - Housing foot height / flange height	9 mm
A2 - Total height from mounting surface	35,5 mm
A4 - Housing height from mounting surface	26 mm
B - Width of Inner Ring	29 mm

UKFC208H
Bearing units

PRODUCT DEFINITION	
B1 - Overall width Inner Ring	46 mm
d - Shaft diameter	35 mm
d1 - Outer dia of eccent. Lock. collar / nut of adapter sleeve	58 mm
e - Distance mounting surface to bearing center	11 mm
G - Grease fitting	M6x1
H3 - Centering dia	100 mm
J - Mounting holes distance	120 mm
L - Housing width / diameter	145 mm
N - Mounting hole dimension	14 mm
s1 - Distance nut to middle of bearing raceway	24,5 mm

PRODUCT PERFORMANCE	
C - Dynamic load rating	29600000 mN
C0 - Static load rating	18200000 mN
Operating temperature min.	253,15 °K
Operating temperature max.	373,15 °K

OTHER FEATURES	
Mass	2,05 kg
Adapter sleeve designation	H2308