SG2DGK10M3

SURGE PROTECTION DEVICE TYPE 2 FOR PHOTOVOLTAIC APPLICATIONS WITH PLUG-IN CARTRIDGE, EN SHORT-CIRCUIT CURRENT RATING ISCPV 1000A, +, -, PE. WITHOUT CONTACT REMOTE



Product designation			Surge protection device (SPD)
Product type designation			SG2
Operating voltage type			DC
Application			DC Power lines
Number of DIN modules			3
Electrical features			
Rated operational voltage DC		VDC	1100
Maximum continuous voltage Ucpv		V	1100
IEC Maximum discharge current Imax 8/20 (L-N/N-PE)		kA	40
IEC Voltage protection level Up (L-N/N-PE)		kV	<3.8
Tripping time ta (L-N/N-PE)		ns	<25
Thermal insulation protection			YES
Backup protection fuse (IEC) with Isc >100A		Class/A	Not needed
Maximum short circuit current Iscpv		kA	11
Status indicator - operating / end of life			Frontal indication
Ambient conditions			
Operating temperature			
	min	°C	-40
	max	°C	85
Max altitude		m	2000
Mechanical features			
Fixing			DIN rail
Conductor section Flexible max (IEC)		mm²	25
Conductor section Rigid max (IEC)		mm²	35
Weight		g	396
Relay output for remote status indication			
Rated current at			
	48V DC	A	0.5

Dimensions

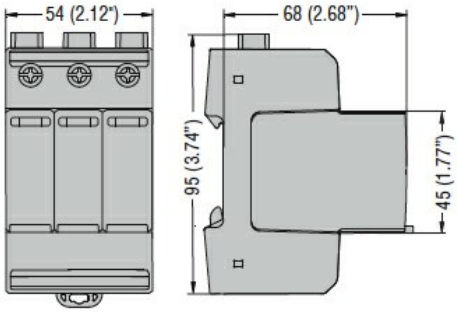

Wiring diagrams

The characteristics described in this document are subject to updates or modifications at any time. The descriptions, technical and functional information, illustrations and instructions in this brochure are purely illustrative, and are consequently not contractually binding

SG2DGK10M3

SURGE PROTECTION DEVICE TYPE 2 FOR PHOTOVOLTAIC APPLICATIONS WITH PLUG-IN CARTRIDGE, EN SHORT-CIRCUIT CURRENT RATING ISCPV 1000A, +, -, PE. WITHOUT CONTACT REMOTE

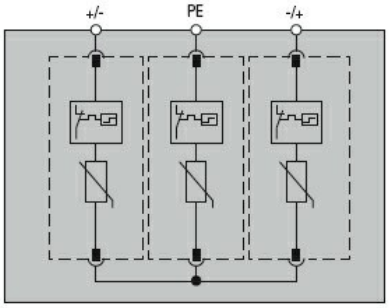

Certifications and compliance

Compliance

IEC/EN50539-11

Certificates

EAC

The characteristics described in this document are subject to updates or modifications at any time. The descriptions, technical and functional information, illustrations and instructions in this brochure are purely illustrative, and are consequently not contractually binding